CUI INC
a bel group

SERIES: PSK-5W | **DESCRIPTION:** INTERNAL AC-DC POWER SUPPLY

FEATURES

- wide input range (85~305 Vac)
- UL/EN/IEC 62368 certified
- meets CISPR32/EN 55032 Class B without external components
- short-circuit, over-current, over-voltage protections

MODEL

MODEL	output voltage (Vdc)	output current max (A)	output power max (W)	ripple and noise typ (mVp-p)	efficiency typ (%)
PSK-5W-3[1,2,3]	3.3	1.25	4.2	100	70
PSK-5W-5[1,2]	5	1.0	5	100	76
PSK-5W-9[1,2,3]	9	0.55	5	100	74
PSK-5W-12[1,2,3]	12	0.42	5	100	77
PSK-5W-15[1,2,3]	15	0.333	5	100	77
PSK-5W-24[1,2,3]	24	0.23	5.5	100	80

Note:
1. Discontinued model - board mount option.
2. Discontinued model - chassis mount option.
3. Discontinued model - DIN-rail mount option.

PART NUMBER KEY

PSK - 5W - XX - X

- PSK - 5W: Base Number
- XX: Output Voltage
- X: Mounting Style:
  blank = board mount
  T = chassis mount
  DIN = DIN-rail mount

DISCONTINUED

INPUT

parameter	conditions/description	min	typ	max	units
voltage	ac input dc input	85 100		305 430	Vac Vdc
frequency		47		63	Hz
current[1]	115 Vac 230 Vac			0.15 0.10	A A
inrush current	115 Vac 230 Vac		10 20		A A
leakage current				5	mA

Note 1: Recommended input fuse - 1A/300V, slow blow

OUTPUT

parameter	conditions/description	min	typ	max	units
capacitive load	3.3 Vdc 5 Vdc 9 Vdc 12 Vdc 15 Vdc 24 Vdc			4,000 4,000 1,000 820 820 470	µF
output voltage accuracy	3.3 V all other models		±3 ±2		% %
line regulation	rated load		±0.5		%
load regulation	0~100% load		±1.0		%
hold-up time	115 Vac input 230 Vac input		8 60		ms ms
switching frequency			100		kHz

PROTECTIONS

parameter	conditions/description	min	typ	max	units
over voltage protection	3.3/5 Vdc output 9 Vdc output 12/15 Vdc output 24 Vdc output			7.5 15 20 30	V V V V
over current protection	self recovery	110			%
short circuit protection	output shutdown, auto recovery				

SAFETY & COMPLIANCE

parameter	conditions/description	min	typ	max	units
isolation voltage	for 1 minute, 5mA	4,000			Vac
safety approvals	UL/EN/IEC 62368				
safety class	Class II				
EMI/EMC	CISPR32/EN55032: Class B (no external components required)				
ESD	IEC/EN 61000-4-2: Contact ±6KV/ Air ±8KV, perf. Criteria B				
radiated immunity	IEC/EN 61000-4-3: 10V/m, perf. Criteria A				
EFT/burst	IEC/EN 61000-4-4: ±2KV, perf. Criteria B IEC/EN 61000-4-4: ±4KV, perf. Criteria B, see recommended EMC circuit				
surge	IEC/EN 61000-4-5: line to line ±1KV, perf. Criteria B IEC/EN 61000-4-5: line to line ±2kV, line to ground ±4kV, perf. Criteria B, see recommended EMC circuit				
conducted immunity	IEC/EN 61000-4-6: 10Vr.m.s, perf. Criteria A				
voltage dips	IEC/EN 61000-4-11: 0%, 70%				
MTBF	MIL-HDBK-217F@25°C	300,000			hours
RoHS	yes				

DISCONTINUED

ENVIRONMENTAL

parameter	conditions/description	min	typ	max	units
operating temperature		-40		70	°C
storage temperature		-40		85	°C
storage humidity		0		95	%

SOLDERABILITY

parameter	conditions/description	min	typ	max	units
wave soldering				260	°C
hand soldering	3~5 seconds max			360	°C

MECHANICAL

parameter	conditions/description	min	typ	max	units
dimensions	DIP: 50.80 x 25.40 x 15.36 chassis mount: 76.00 x 31.50 x 24.16 DIN rail: 76.00 x 31.50 x 28.76				mm mm mm
weight	DIP chassis mount DIN rail		31 52 70		g g g
case material	Black plastic, flame-retardant and heat-resistant (UL94V-0)				

MECHANICAL DRAWING (BOARD MOUNT)

units: mm [inch]
tolerance: ±0.50 [±0.020]

PIN CONNECTIONS	
PIN	Function
1	AC(N)
2	AC(L)
3	-Vo
4	+Vo

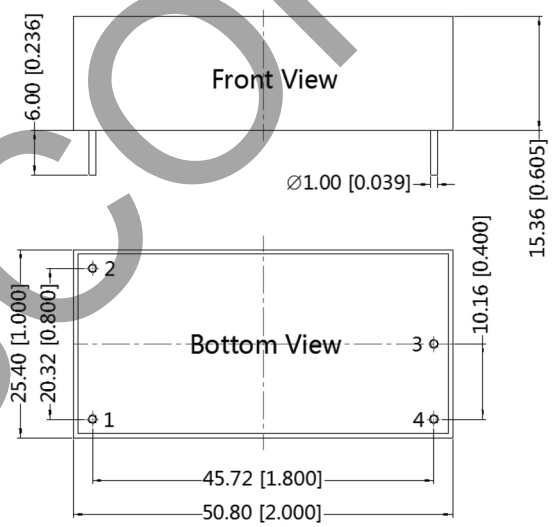

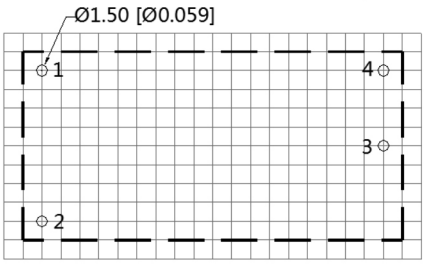

Note:Grid 2.54*2.54mm

DISCONTINUED

MECHANICAL DRAWING (CHASSIS MOUNT)

units: mm [inch]
tolerance: ±0.50 [±0.020]
wire range: 24~12 AWG
tightening torque:Max 0.4 N·m

PIN CONNECTIONS	
PIN	Function
1	AC(N)
2	AC(L)
3	-Vo
4	+Vo

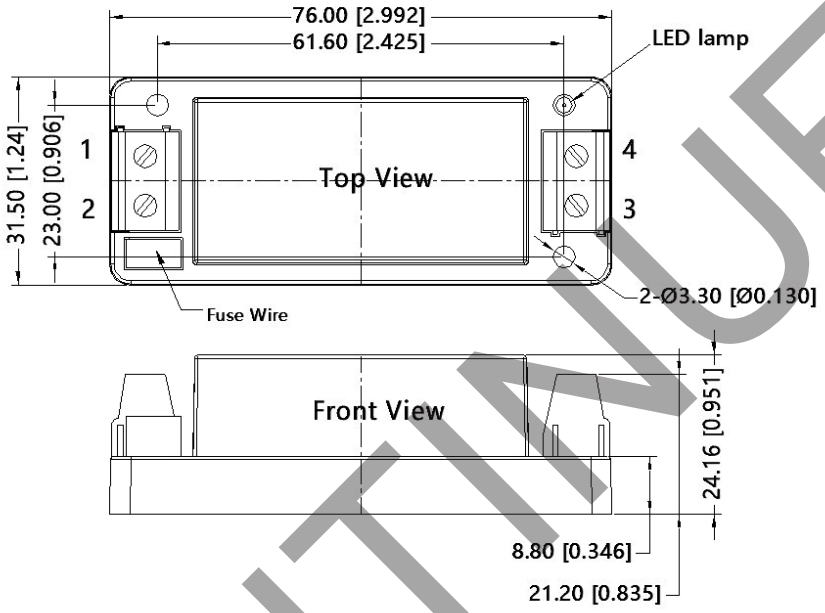

MECHANICAL DRAWING (DIN-RAIL MOUNT)

units: mm [inch]
tolerance: ±0.50 [±0.020]
wire range: 24~12 AWG
tightening torque:Max 0.4 N·m
mounting rail: TS35, rail needs to connect safety ground

PIN CONNECTIONS	
PIN	Function
1	AC(N)
2	AC(L)
3	-Vo
4	+Vo

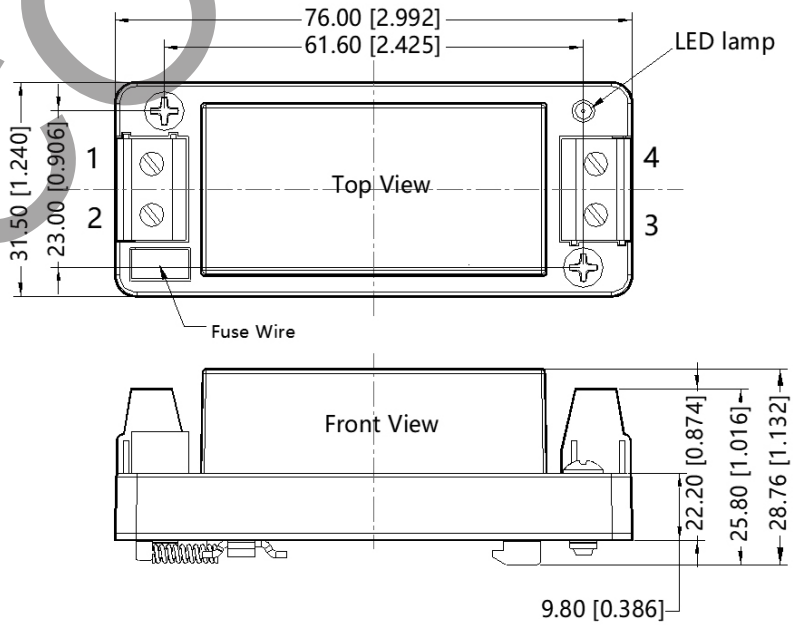

DISCONTINUED

TYPICAL APPLICATION CIRCUIT

Output Filter Components:
We recommend using an electrolytic capacitor with high frequency, and low ESR rating for C2 (refer to manufacture's datasheet). Choose a Capacitor voltage rating with at least 20% margin, in other words not exceeding 80%. C1 is a ceramic capacitor used for filtering high-frequency noise and TVS is a recommended suppressor diode to protect the application in case of a converter failure.

Figure 1

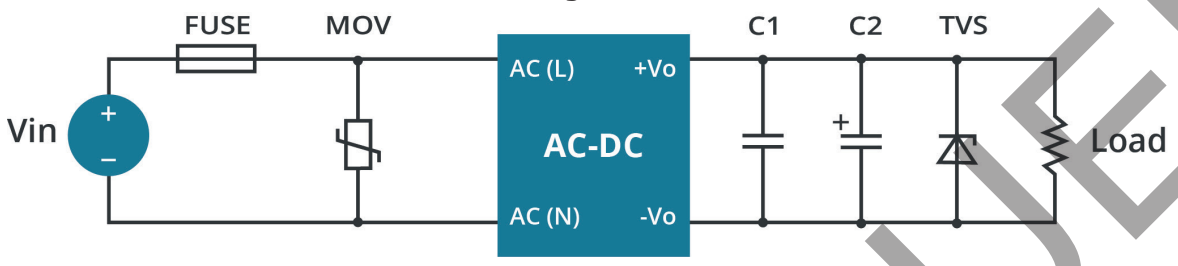

Table 1

Part No.	C1(µF)	C2(µF)	FUSE	MOV	TVS
PSK-5W-3	1	220	1A/300V, slow-blow, required	S14K350	SMBJ7A
PSK-5W-5		220			SMBJ7A
PSK-5W-9		100			SMBJ12A
PSK-5W-12		100			SMBJ20A
PSK-5W-15		100			SMBJ20A
PSK-5W-24		47			SMBJ30A

EMC RECOMMENDED CIRCUIT

Figure 2

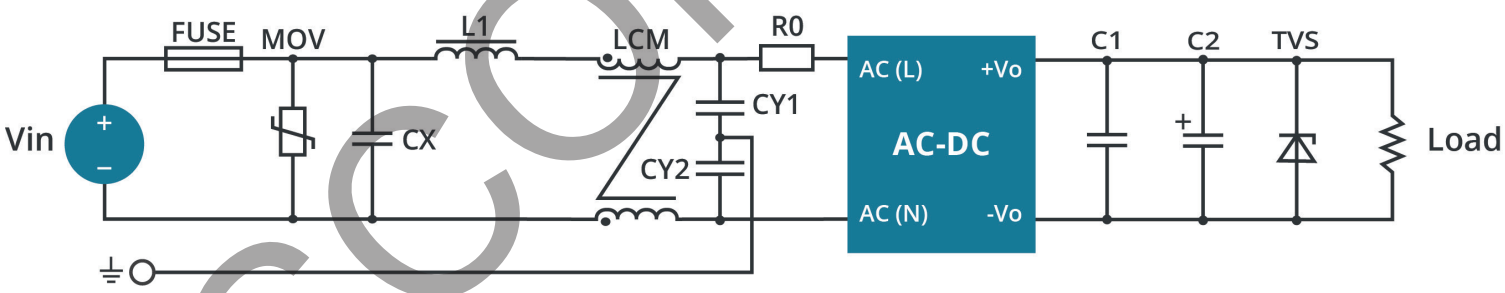

Table 2

Components	Recommended Value
MOV	S14K350
CX	0.1µF/310VAC
L1	4.7uH/2.0A
CY1	1nF/400VAC
CY2	1nF/400VAC
LCM	2.2mH
FUSE	2A/300V, slow-blow, required
R0	33Ω/3W

DISCONTINUED

DERATING CURVE

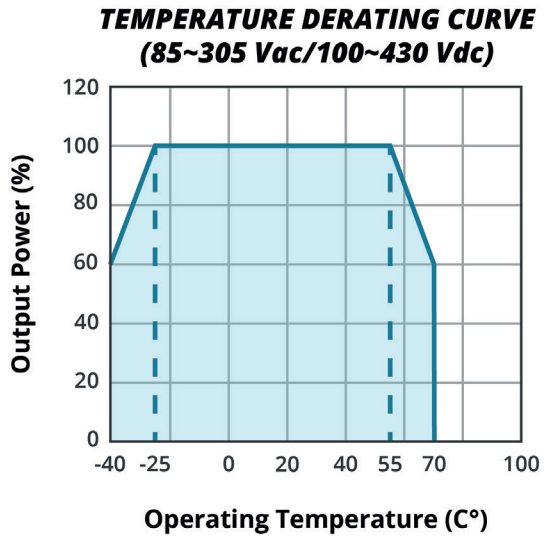

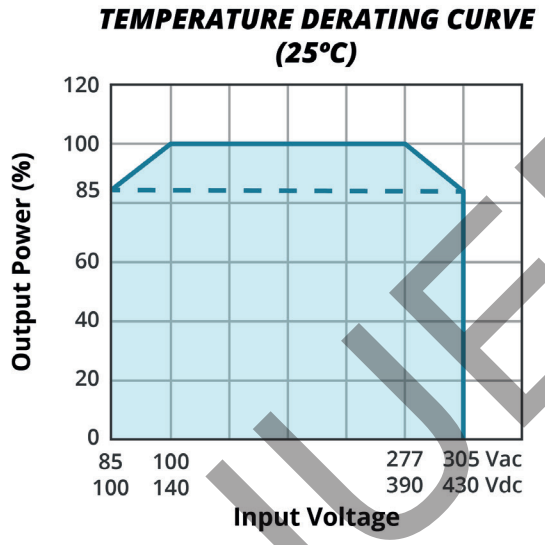

EFFICIENCY CURVES

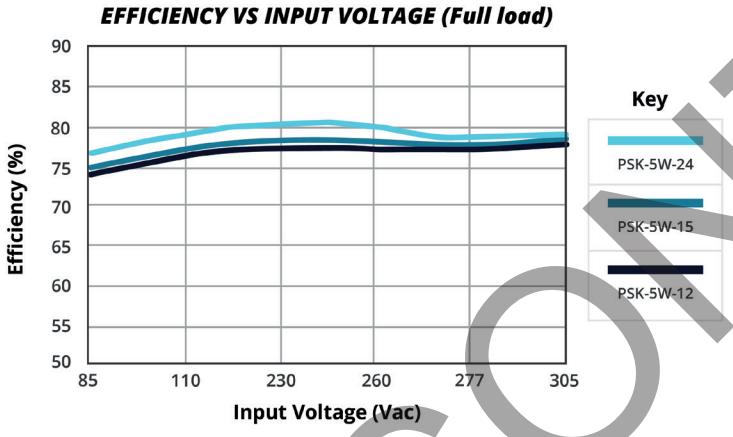

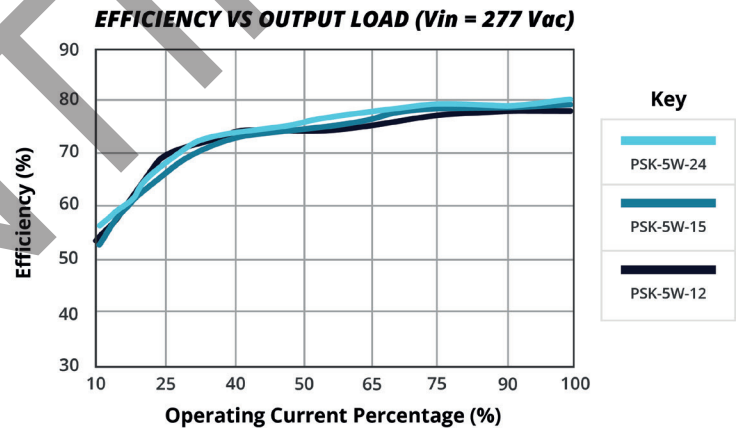

DISCONTINUED

REVISION HISTORY

rev.	description	date
1.0	initial release	06/29/2020
1.01	mechanical drawings updated	12/03/2020
1.02	figure and circuit drawings updated	02/24/2021
1.03	discontinued models PSK-5W-3, PSK-5W-9, PSK-5W-12, PSK-5W-15, PSK-5W-3-T, PSK-5W-12-T, PSK-5W-15-T, PSK-5W-3-DIN, PSK-5W-5-DIN, PSK-5W-12-DIN, PSK-5W-15-DIN, PSK-5W-24-DIN	07/01/2022
1.04	discontinued models PSK-5W-3-DIN, PSK-5W-5, PSK-5W-5-T, PSK-5W-9-T, PSK-5W-9-DIN, PSK-5W-24, PSK-5W-24-T	09/13/2022

The revision history provided is for informational purposes only and is believed to be accurate.

DISCONTINUED

CUI INC
a bel group

Headquarters
20050 SW 112th Ave.
Tualatin, OR 97062
800.275.4899

Fax 503.612.2383
cui.com
techsupport@cui.com

CUI offers a two (2) year limited warranty. Complete warranty information is listed on our website.

CUI reserves the right to make changes to the product at any time without notice. Information provided by CUI is believed to be accurate and reliable. However, no responsibility is assumed by CUI for its use, nor for any infringements of patents or other rights of third parties which may result from its use.

CUI products are not authorized or warranted for use as critical components in equipment that requires an extremely high level of reliability. A critical component is any component of a life support device or system whose failure to perform can be reasonably expected to cause the failure of the life support device or system, or to affect its safety or effectiveness.