CUI INC
a bel group

SERIES: PBO-10C | **DESCRIPTION:** INTERNAL AC-DC POWER SUPPLY

DISCONTINUED

FEATURES

- wide input range (85 ~ 305 Vac)
- wide operating temperature range (-40 to +85 C)
- IEC/EN/UL 62368 certified
- designed to meet 61558 & 60335 safety standards
- 1,000,000 hour MTBF
- flexible implementations to power a wide array of applications

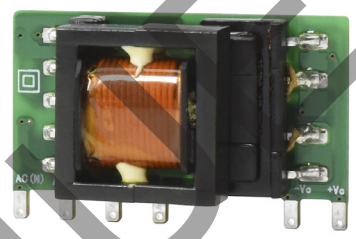

MODEL	output voltage (Vdc)	output current max (A)	output power max (W)	ripple and noise[1] typ (mVp-p)	efficiency[2] typ (%)
PBO-10C-3	3.3	2.0	6.6	150	73.0
PBO-10C-5	5.0	2.0	10.0	150	77.0
PBO-10C-9	9.0	1.1	10.0	150	80.0
PBO-10C-12	12.0	0.83	10.0	150	82.0
PBO-10C-15	15.0	0.67	10.0	150	82.0
PBO-10C-24	24.0	0.42	10.0	150	83.0

Note: 1. At full load, nominal input, 20 MHz bandwidth oscilloscope, see Application Circuit.
2. At 230 Vac input.

PART NUMBER KEY

PBO-10C - XX

Base Number — Output Voltage

DISCONTINUED

INPUT

parameter	conditions/description	min	typ	max	units
voltage	ac input dc input	85 100		305 430	Vac Vdc
frequency		47		63	Hz
current	at 115 Vac at 230 Vac			0.30 0.18	A A
inrush current	at 115 Vac at 277 Vac		15 30		A A
no load power consumption	at 230 Vac 3.3 & 5 Vdc output models 9, 12 & 15 Vdc output models 24 Vdc output models			 0.10 0.12 0.15	 W W W

OUTPUT

parameter	conditions/description	min	typ	max	units
capacitive load	3.3 Vdc output models 5 Vdc output models 9 Vdc output models 12 Vdc output models 15 Vdc output models 24 Vdc output models			1,500 1,500 1,000 680 470 330	µF µF µF µF µF µF
initial set point accuracy	3.3 Vdc output other outputs		±3 ±2		% %
line regulation	at rated load		±1		%
load regulation	0% ~ 100% load		±1.5		%
temperature coefficient			±0.02		%/°C

PROTECTIONS

parameter	conditions/description	min	typ	max	units
over voltage protection	output voltage clamp & hiccup 3.3 & 5 Vdc output models 9 Vdc output models 12 Vdc output models 15 Vdc output models 24 Vdc output models			 9.0 15.0 16.0 21.0 32.0	 Vdc Vdc Vdc Vdc Vdc
over current protection	auto recovery	110			%
short circuit protection	continuous, auto recovery, hiccup				

SAFETY & COMPLIANCE

parameter	conditions/description	min	typ	max	units
isolation voltage	input to output for 1 minute, leakage current <5mA	3,000			Vac
safety approvals	certified to 62368: IEC/EN/UL designed to meet 61558: IEC, EN designed to meet 60335: IEC, EN				
safety class	class II				
EMI/EMC	CISPR32/EN55032 CLASS A (Recommended circuit 1, 4) CISPR32/EN55032 CLASS B (Recommended circuit 2, 3)				
ESD	IEC/EN 61000-4-2 Contact ±6KV perf. Criteria B				
radiated immunity	IEC/EN61000-4-3 10V/m perf. Criteria A				
EFT/burst	IEC/EN61000-4-4 ±2KV (Recommended circuit 1, 2) perf. Criteria B IEC/EN61000-4-4 ±4KV (Recommended circuit 3, 4) perf. Criteria B				
surge	IEC/EN61000-4-5 line to line ±1KV (Recommended circuit 1, 2) perf. Criteria B IEC/EN61000-4-5 line to line±2KV (Recommended circuit 3, 4) perf. Criteria B				
conducted immunity	IEC/EN61000-4-6 10Vr.m.s perf. Criteria A				

SAFETY & COMPLIANCE (CONTINUED)

parameter	conditions/description	min	typ	max	units
voltage dips and interruptions	IEC/EN61000-4-11 0%, 70% perf. Criteria B				
MTBF	as per MIL-HDBK-217F at 25 °C	1,000,000			hours
RoHS	yes				

ENVIROMENTAL

parameter	conditions/description	min	typ	max	units
operating temperature		-40		85	°C
storage temperature		-40		105	°C
storage humidity				95	%

DERATING CURVES

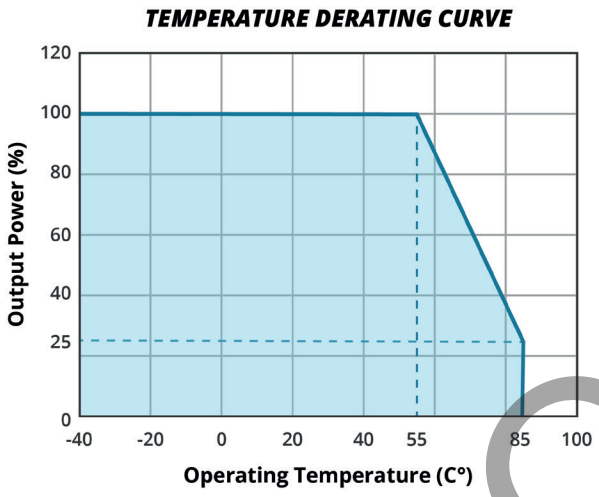

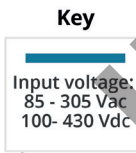

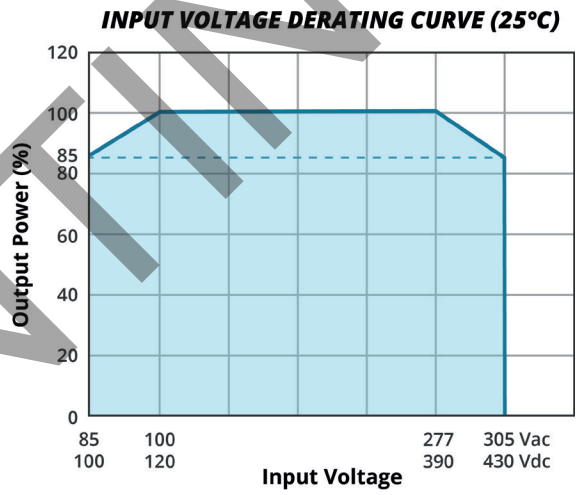

EFFICIENCY CURVES

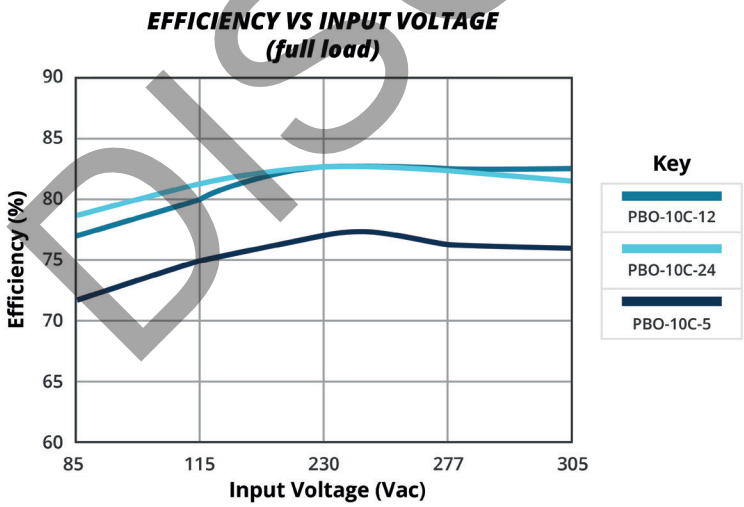

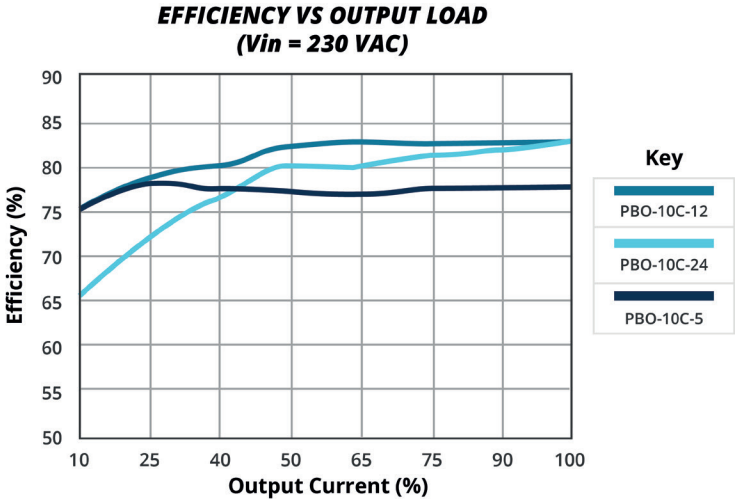

DISCONTINUED

MECHANICAL

parameter	conditions/description	min	typ	max	units
dimensions	32.00 x 17.20 x 15.05 (1.259 x 0.677 x 0.592 inches)				mm
weight			8.2		g
cooling	free air convection				

MECHANICAL DRAWING

units: mm [inch]
general tolerance: ±1.00 [±0.039]

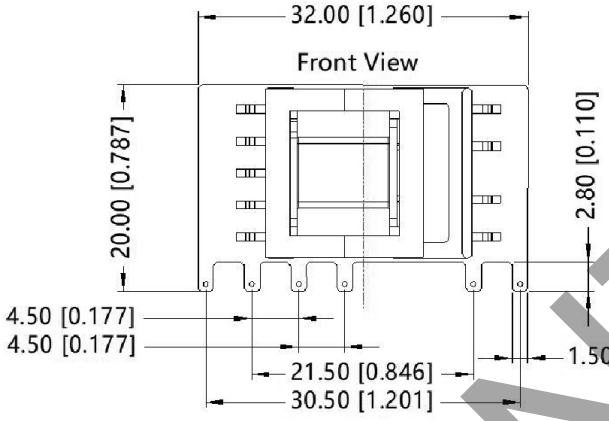

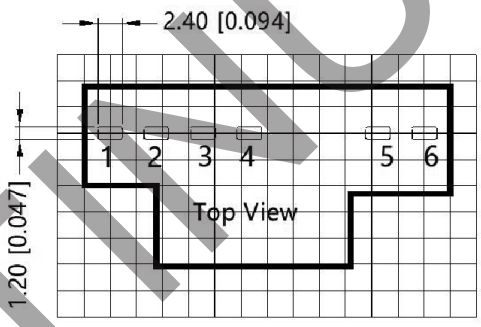

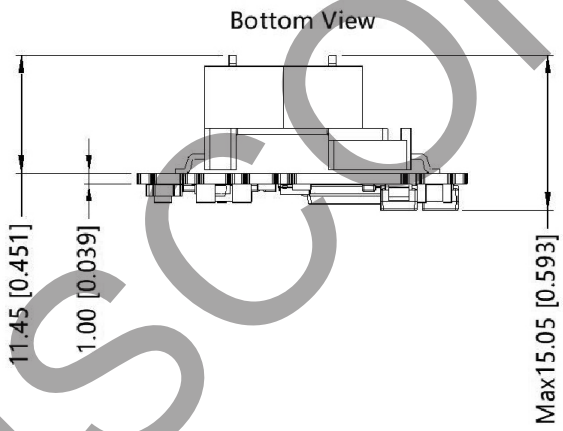

PIN CONNECTIONS	
PIN	Function
1	AC (N)
2	AC (L)
3	+V (cap)
4	-V (cap)
5	-Vo
6	+Vo

DISCONTINUED

APPLICATION DESIGN REFERENCE

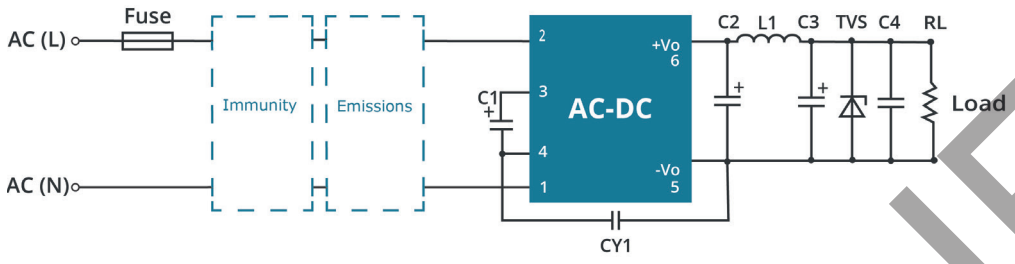

PBO-10C Series additional component selection guide (no EMC devices)							
Part no.	C1[1] (required)	C2 (required)	L1 (required)	C3[2] (required)	C4	CY1 (required)	TVS[3]
PBO-10C-3	22µF/450V	820µF/16V (solid-state capacitor)	2.2µH max 15mΩ/6.5A	150µF/35V	0.1µF/50V (ceramic capacitor)	1.0nF/400Vac	SMBJ7.0A
PBO-10C-5							SMBJ7.0A
PBO-10C-9		270uF/16V (solid-state capacitor)					SMBJ12A
PBO-10C-12							SMBJ20A
PBO-10C-15		470uF/35V		220µF/35V			SMBJ20A
PBO-10C-24							SMBJ30A

Note:
1. Recommended to use a capacitor with ripple current >300 mA at 100 kHz.
2. Recommended to use a high frequency, low ESR, electrolytic capacitor with at least 20% margin on voltage rating.
3. A suppressor diode (TVS) is recommended to protect the downstream application in case of converter failure and should be rated for a minimum of 1.2 times the converter's output voltage.

PBO-10C Series Enviromental and EMC selection guide						
Recommended circuit	Application enviromental	Typical industry	Input voltage range	Enviroment temperature	Emissions	Immunity
1	Basic application	None	85~305Vac	-40°C to 85°C	Class A	Class III
2	Indoor civil enviroment	Smart home/Home appliances (2 Y-caps)		-25°C to 55°C	Class B	Class III
	Indoor general enviroment	Intelligent building/ Intelligent agriculture				
3	Indoor industrial	Manufacturing workoshop		-25°C to 55°C	Class B	Class IV
4	Outdoor general enviroment	ITS/Video monitoring/ Charging point/Com-munication/Security and protection		-40°C to 85°C	Class A	Class IV

Immunity design circuits reference		Emissions design circuits reference	
Class III	Class IV	Class A	Class B
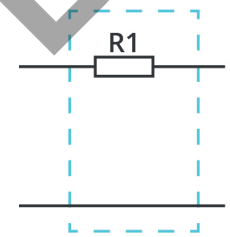	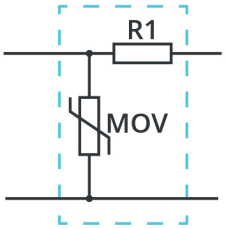	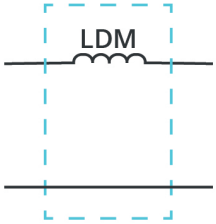	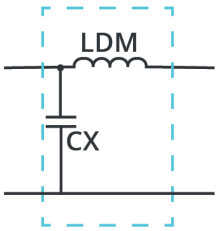

DISCONTINUED

APPLICATION DESIGN REFERENCE (CONTINUED)

Circuit 1

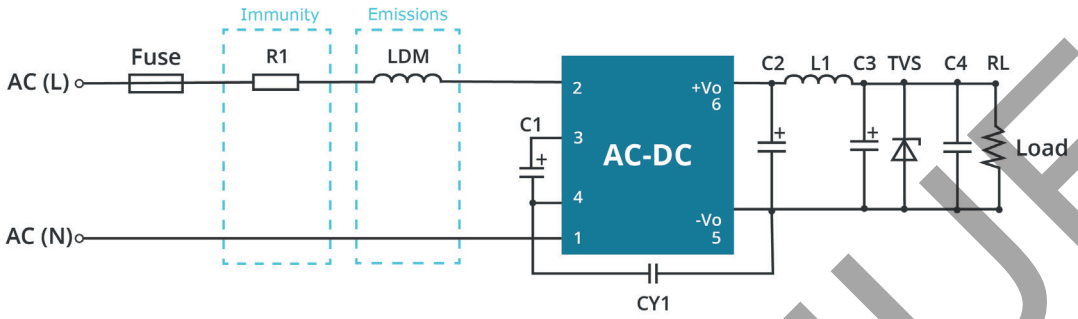

Table 1

Application enviromental	Ambient temperature range	Imunity Class	Emissions Class
Basic application	-40°C ~ 85°C	Class III	Class A

Component	Recommended value
FUSE (required)	1A/300V, slow blow
R1 (wire-wound resistor, required)	6.8Ω/3W
LDM	2.2mH/4Ω max/0.24A min

Note: R1 must be a wire-wound resistor; do not use a chip or carbon film resistor.

Circuit 2

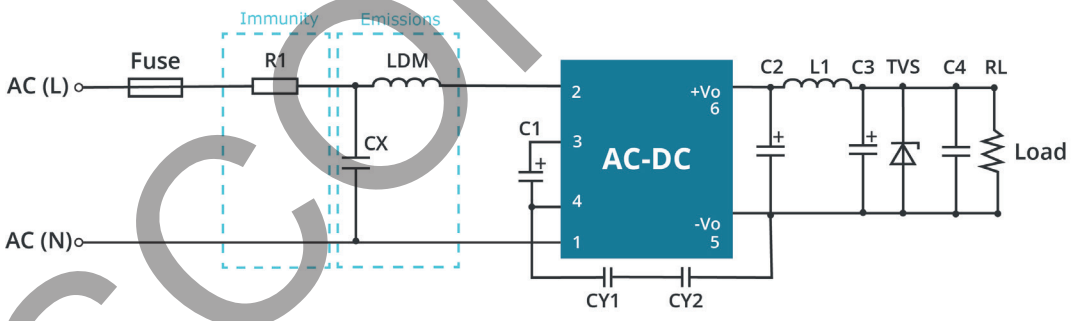

Table 2

Application enviromental	Ambient temperature range	Imunity Class	Emissions Class
Indoor civil / general	-25°C ~ 55°C	Class III	Class B

Component	Recommended value
FUSE (required)	1A/300V, slow-blow
R1 (wire-wound resistor, required)	6.8Ω/3W
CY1 (CY2)	1.0nF/400Vac
LDM	2.2mH/ 4Ω/0.24A
CX	0.1μF/310Vac

Note:
1. For Smart Home and Home Appliance applications two Y-capacitors are required in series (2.2 nF/250 Vac each) to meet 60335 household safety requirements.
2. Many safety standards require a bleeder resistor no greater than 3.8MΩ in parallel with the X-capacitor.
3. R1 must be a wire-wound resistor; do not use a chip or carbon film resistor.

DISCONTINUED

APPLICATION DESIGN REFERENCE (CONTINUED)

Circuit 3

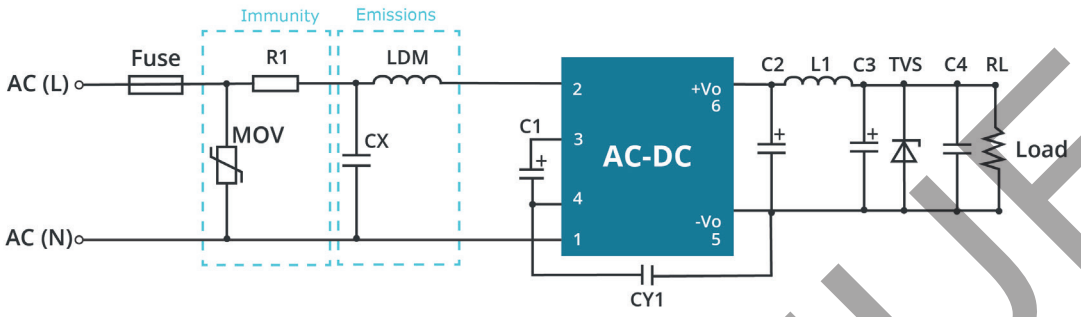

Table 3

Application enviromental	Ambient temperature range	Imunity Class	Emissions Class
Indoor industrial	-25°C ~ 55°C	Class IV	Class B

Component	Recommended value
FUSE (required)	2A/300V, slow-blow
MOV	S14K350
CY1	1.0nF/400Vac
CX	0.1μF/310Vac
LDM	2.2mH/ 4Ω/0.24A
R1 (wire-wound resistor, required)	6.8Ω/3W

Note: 1. Many safety standards require a bleeder resistor no greater than 3.8MΩ in parallel with the X-capacitor.
2. R1 must be a wire-wound resistor; do not use a chip or carbon film resistor.

Circuit 4

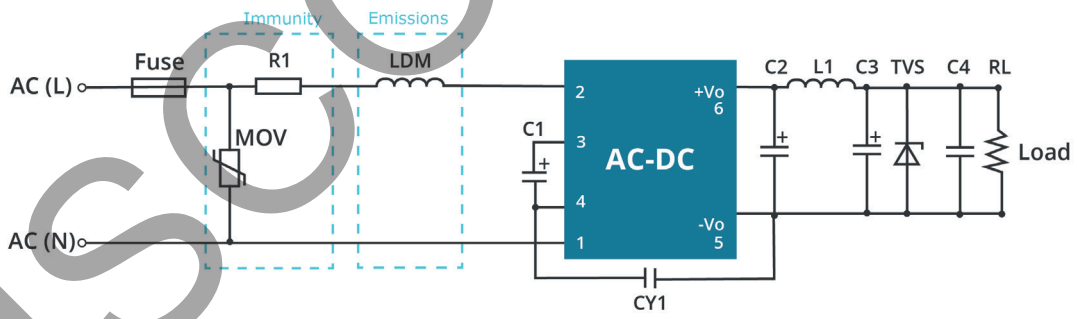

Table 4

Application enviromental	Ambient temperature range	Imunity Class	Emissions Class
Oudoor general enviroment	-40°C ~ 85°C	Class IV	Class A

Component	Recommended value
FUSE (required)	2A/300V, slow-blow
MOV	S14K350
LDM	2.2mH/ 4Ω/0.24A
R1 (wire-wound resistor, required)	6.8Ω/3W

Note: R1 must be a wire-wound resistor; do not use a chip or carbon film resistor.

DISCONTINUED

REVISION HISTORY

rev.	description	date
1.0	initial release	11/12/2020
1.01	derating and efficiency curves updated	01/21/2022
1.02	UKCA mark added	05/26/2022

The revision history provided is for informational purposes only and is believed to be accurate.

DISCONTINUED

CUI INC
a bel group

Headquarters
20050 SW 112th Ave.
Tualatin, OR 97062
800.275.4899

Fax 503.612.2383
cui.com
techsupport@cui.com

CUI offers a two (2) year limited warranty. Complete warranty information is listed on our website.

CUI reserves the right to make changes to the product at any time without notice. Information provided by CUI is believed to be accurate and reliable. However, no responsibility is assumed by CUI for its use, nor for any infringements of patents or other rights of third parties which may result from its use.

CUI products are not authorized or warranted for use as critical components in equipment that requires an extremely high level of reliability. A critical component is any component of a life support device or system whose failure to perform can be reasonably expected to cause the failure of the life support device or system, or to affect its safety or effectiveness.