CUI INC®

SERIES: EPSA 24W | **DESCRIPTION:** AC-DC POWER SUPPLY

DISCONTINUED

FEATURES

- up to 24 W power
- universal input (90~264 Vac)
- single regulated output from 12~24 V
- short circuit protections
- UL/cUL safety approvals
- level V efficiency
- custom designs available

MODEL	output voltage (Vdc)	output current max (A)	output power max (W)	ripple and noise[1] max (mVp-p)	efficiency level
EPSA120200U	12	2	24	150	V
EPSA150160U	15	1.6	24	150	V
EPSA240100U	24	1	24	240	V

Notes: 1. At full load, 100 ~ 240 Vac input, 20 MHz bandwidth oscilloscope, each output terminated with 10 µF aluminum electrolytic and 0.1 µF ceramic capacitors.

PART NUMBER KEY

EPSA120200U - XX - SZ - CXX

- EPSA120200U: Base Number (example of 12 Vdc, 2 A)
- XX: DC Plug Type
- SZ: Factory Designation
- CXX: Reserved for Custom Configurations

INPUT

parameter	conditions/description	min	typ	max	units
voltage		90		264	Vac
frequency		47		63	Hz
current				0.8	A RMS
inrush current[1]	at 115 Vac, full load, cold start at 230 Vac, full load, cold start			50 100	A A
leakage current				0.25	mA
no load power consumption				0.3	W

Notes: 1. 24 V model, no damage at 230 Vac, cool start

OUTPUT

parameter	conditions/description	min	typ	max	units
line regulation			±1		%
load regulation			±5		%

PROTECTIONS

parameter	conditions/description
short circuit protection	output shut down and auto restart

SAFETY & COMPLIANCE

parameter	conditions/description	min	typ	max	units
isolation voltage	input to output at 10 mA for 1 minute			3,000 4,242	Vac Vdc
isolation resistance	input to output at 500 Vdc	100			MΩ
safety approvals	UL 60950-1				
EMI/EMC	FCC Class B				
RoHS compliant	yes				

ENVIRONMENTAL

parameter	conditions/description	min	typ	max	units
operating temperature		0		40	°C
storage temperature		-10		70	°C
operating humidity		20		80	%
storage humidity		10		90	%

DISCONTINUED

MECHANICAL

parameter	conditions/description	min	typ	max	units
dimensions	3.150 x 2.110 x 1.378 (80 x 53.6 x 35 mm)				inch
input plug	fixed US				

MECHANICAL DRAWING

units: mm

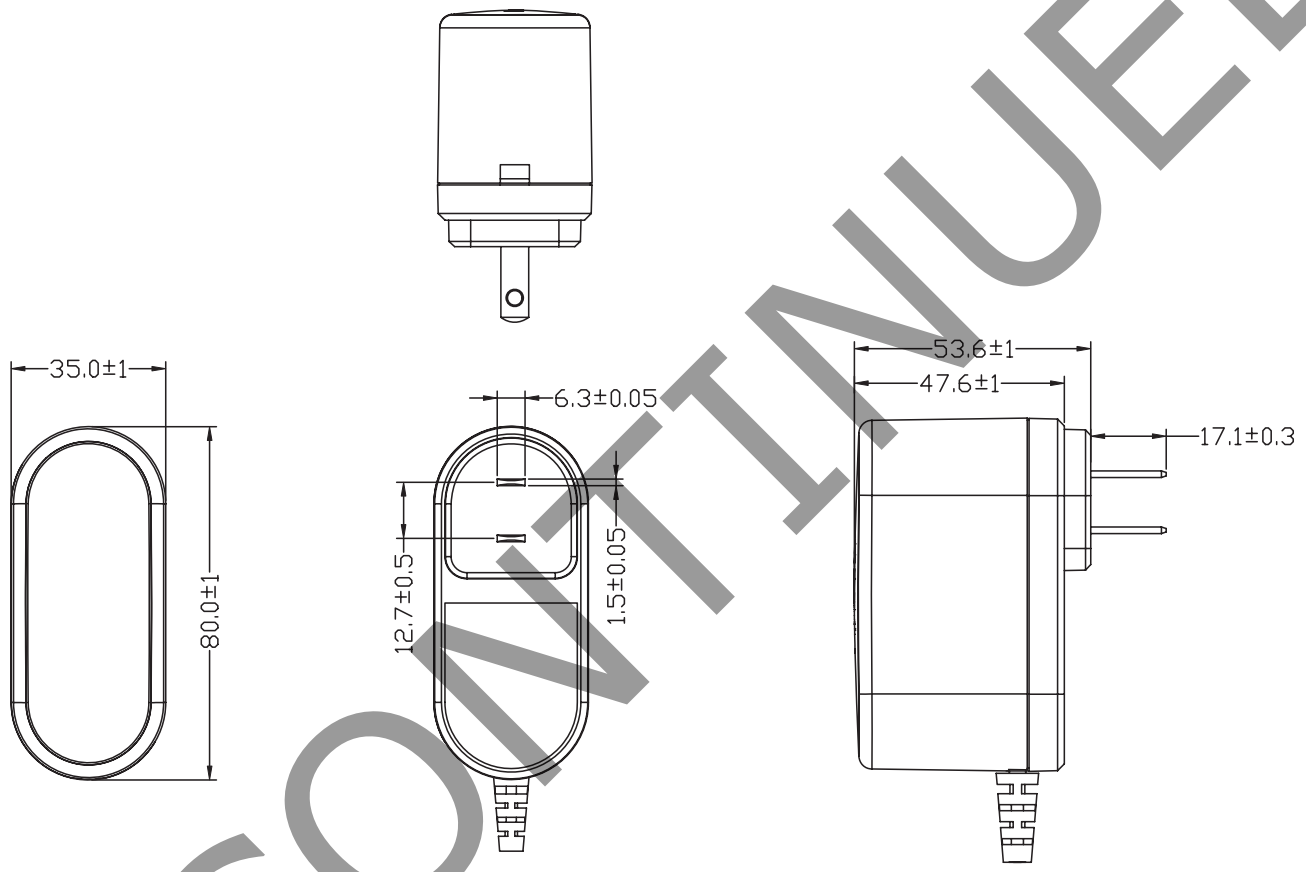

DC CORD

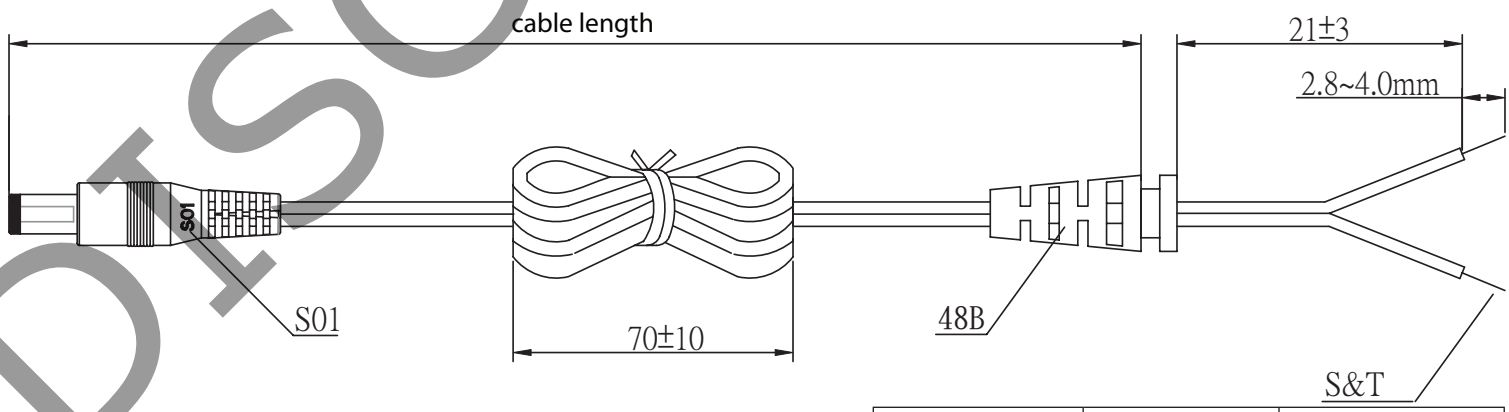

MODEL NO.	CABLE GAUGE	CORD LENGTH
EPSA120200U	20 AWG	1,530 mm ±100
EPSA150160U[1]	20 AWG	1,530 mm ±100
EPSA240100U[1]	22 AWG	1,530 mm ±100

Note: 1. "P5P" models have 1,830 mm ± 100 cord length

DISCONTINUED

OUTPUT PLUG OPTIONS

3.5 mm Phono Plug

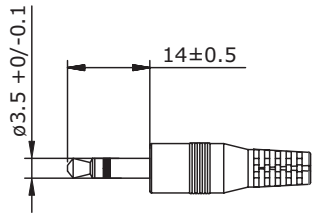

P1

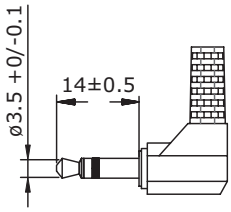

P1R

*Tip positive

Standard DC Plug

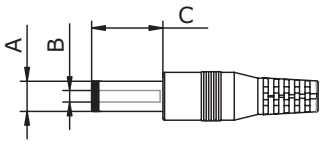

Standard PX

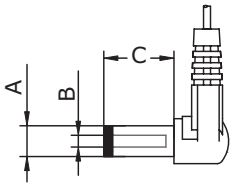

Right Angle PXR

	A	B	C	Unit
P5/P5R	5.5	2.1	9.5	mm
P6/P6R	5.5	2.5	9.5	mm
P7/P7R	3.5	1.35	9.5	mm
P8/P8R	3.8	1.35	9.5	mm
P9/P9R	3.8	1.05	9.5	mm

Locking DC Plug

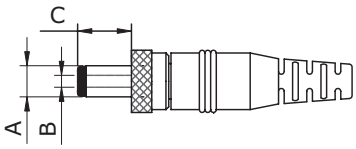

	A	B	C	Unit
P10	5.5	2.1	9.5	mm
P11	5.5	2.5	9.5	mm

EIAJ Plugs

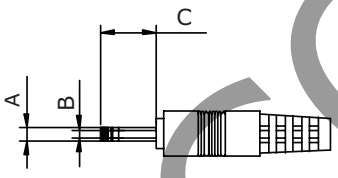

Standard PXX

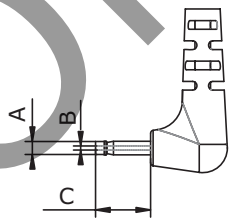

Right Angle PXXR

	EIAJ	A	B	C	D	Unit
P12/P12R	EIAJ-1	2.35	0.7	9.5	NA	mm
P13/P13R	EIAJ-2	4.0	1.7	9.5	5.0	mm
P14/P14R	EIAJ-3	4.75	1.7	9.5	5.0	mm

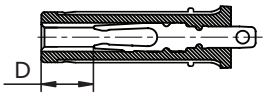

Stripped and Tinned

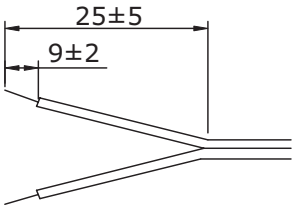

DC PLUG TYPE

ST

Stripped and Tinned

PXX X X

Plug Type

Plug Angle:
"Blank" = Standard
R = Right Angle

Plug Polarity:
"Blank" = N/A
P = Center Positive
N = Center Negative

*Contact CUI for additional output plug options.

DISCONTINUED

REVISION HISTORY

rev.	description	date
1.0	initial release	02/01/2010
1.01	updated output plug options	06/21/2010
1.02	updated inrush current, protection data, and output plug options	07/06/2011
1.03	new template applied	01/27/2012
1.04	updated P7/P7R B dimension	03/15/2012
1.05	V-Infinity branding removed, EMI/EMC data updated	08/21/2012
1.06	CE data removed	05/15/2013
1.07	updated datasheet	12/10/2014

The revision history provided is for informational purposes only and is believed to be accurate.

DISCONTINUED

CUI INC®

Headquarters
20050 SW 112th Ave.
Tualatin, OR 97062
800.275.4899

Fax 503.612.2383
cui.com
techsupport@cui.com

This device complies with part 15 of the FCC Rules. Operation is subject to the following two conditions:
(1) This device may not cause harmful interference, and
(2) this device must accept any interference received, including interference that may cause undesired operation.

CUI offers a one (1) year limited warranty. Complete warranty information is listed on our website.

CUI reserves the right to make changes to the product at any time without notice. Information provided by CUI is believed to be accurate and reliable. However, no responsibility is assumed by CUI for its use, nor for any infringements of patents or other rights of third parties which may result from its use.

CUI products are not authorized or warranted for use as critical components in equipment that requires an extremely high level of reliability. A critical component is any component of a life support device or system whose failure to perform can be reasonably expected to cause the failure of the life support device or system, or to affect its safety or effectiveness.