MODEL: CPT-2745-L100 | DESCRIPTION: PIEZOELECTRIC DIAPHRAGM

FEATURES

- 100 mm lead wire
- piezo element
- externally driven

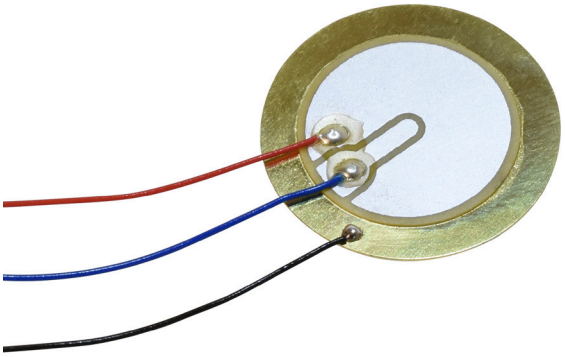

SPECIFICATIONS

parameter	conditions/description	min	typ	max	units
operating voltage				30	Vp-p
resonant frequency		4,000	4,500	5,000	Hz
resonant impedance				500	Ω
electrostatic capacitance	at 120 Hz	11,200	16,000	20,800	pF
dimensions	Ø27 x 0.51				mm
weight			2.5		g
material	brass				
terminal	wire leads				
operating temperature		-20		60	°C
storage temperature		-20		70	°C
RoHS	yes				

Notes: 1. All specifications measured at 25±3°C, humidity at 60~70%, under 86~106 kPa pressure, unless otherwise noted.

SOLDERABILITY

parameter	conditions/description	min	typ	max	units
hand soldering	for 3 seconds	370	380	390	°C

MECHANICAL DRAWING

units: mm
tolerance: ±0.5 mm

wire: UL 1571 32 AWG

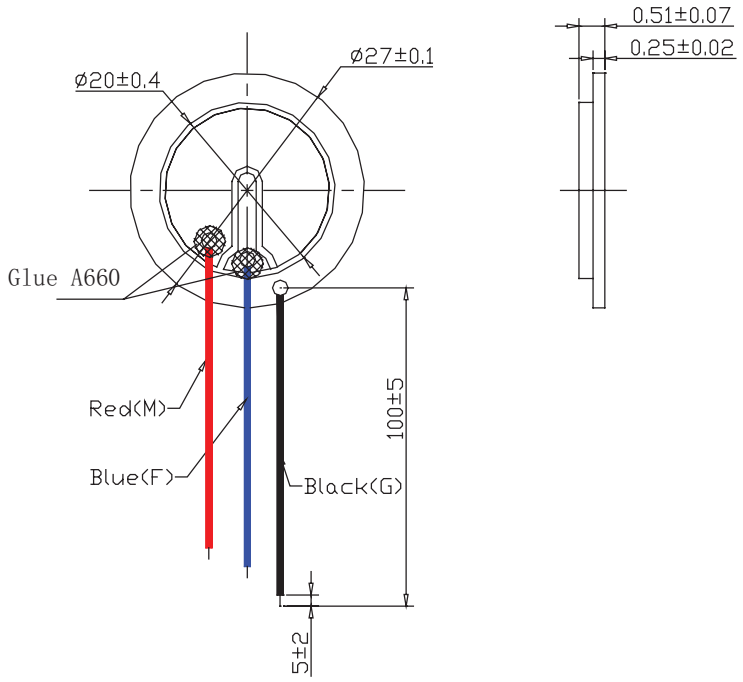

APPLICATION CIRCUIT

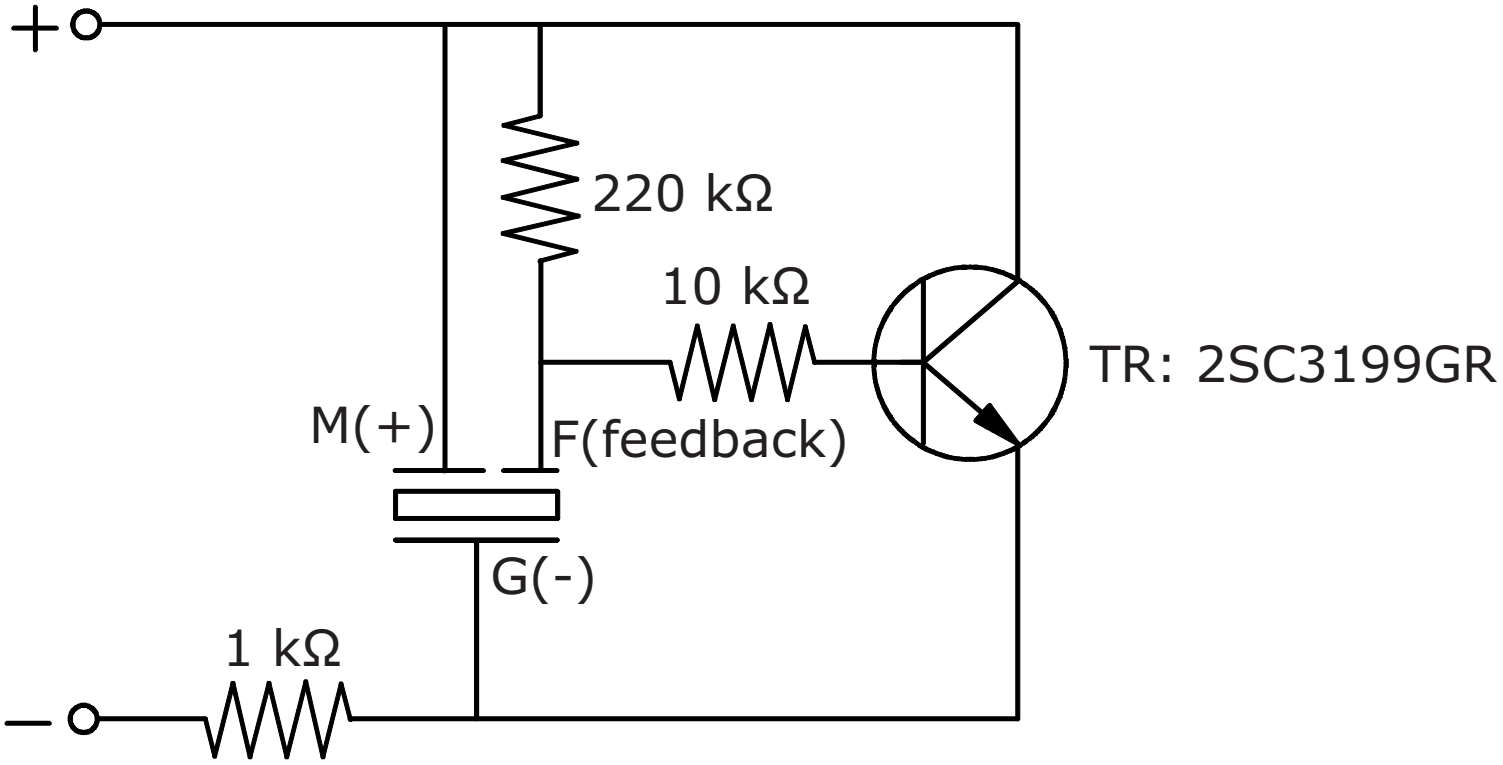

PACKAGING

units: mm

Carton Size: 315 x 310 x 300 mm
Carton QTY: 2,500 pcs per carton

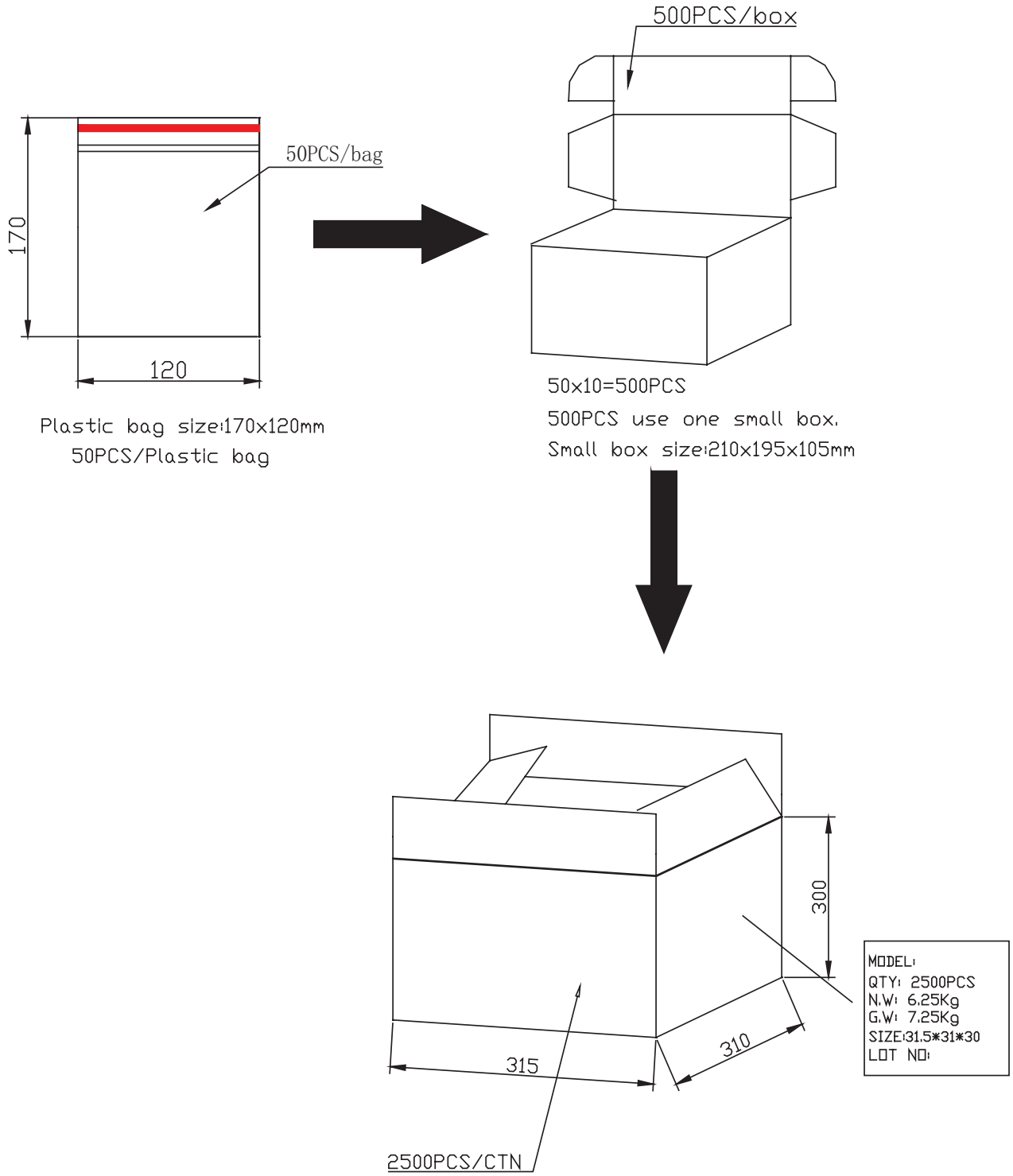

REVISION HISTORY

rev.	description	date
1.0	initial release	07/15/2019
1.01	brand update	01/03/2020
1.02	logo, datasheet style update	08/05/2022

The revision history provided is for informational purposes only and is believed to be accurate.

CUI Devices offers a one (1) year limited warranty. Complete warranty information is listed on our website.

CUI Devices reserves the right to make changes to the product at any time without notice. Information provided by CUI Devices is believed to be accurate and reliable. However, no responsibility is assumed by CUI Devices for its use, nor for any infringements of patents or other rights of third parties which may result from its use.

CUI Devices products are not authorized or warranted for use as critical components in equipment that requires an extremely high level of reliability. A critical component is any component of a life support device or system whose failure to perform can be reasonably expected to cause the failure of the life support device or system, or to affect its safety or effectiveness.