MODEL: CPI-3533-97ST | DESCRIPTION: PIEZO BUZZER INDICATOR

FEATURES

- screw terminals
- 97 dB
- piezo
- internally driven

SPECIFICATIONS

parameter	conditions/description	min	typ	max	units
rated voltage			12		Vdc
operating voltage		4		28	Vdc
current consumption	at rated voltage			8	mA
rated frequency	at rated voltage	2,300	2,800	3,300	Hz
sound pressure level	at 10 cm, rated voltage	97			dB
tone	single				
dimensions	Ø43 x 33				mm
weight			43		g
material	ABS				
terminal	screw terminals (brass with nickel plating)				
operating temperature		-20		60	°C
storage temperature		-30		70	°C
RoHS	yes				

Notes: 1. All specifications measured at 25±3°C, humidity at 60~70%, under 86~106 kPa pressure, unless otherwise noted.

SOLDERABILITY

parameter	conditions/description	min	typ	max	units
hand soldering		370	380	390	°C

MECHANICAL DRAWING

units: mm
tolerance: ±0.5 mm

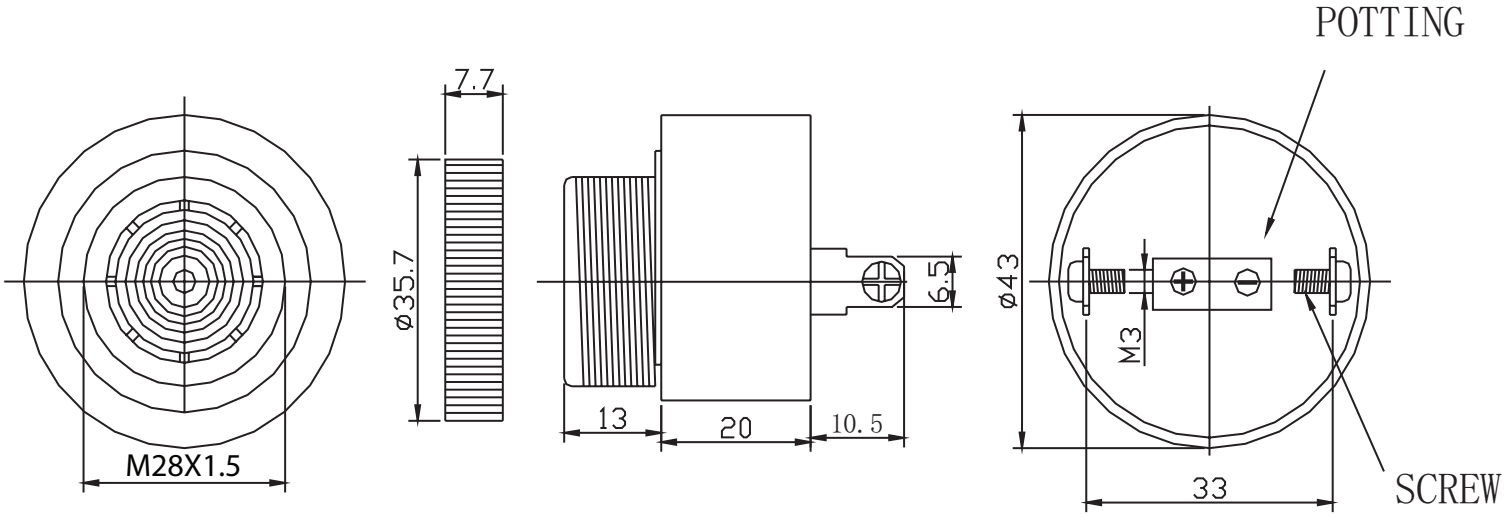

PERFORMANCE CURVES

SPL: Voltage vs. Sound Pressure Level
I: Voltage vs. Current Consumption

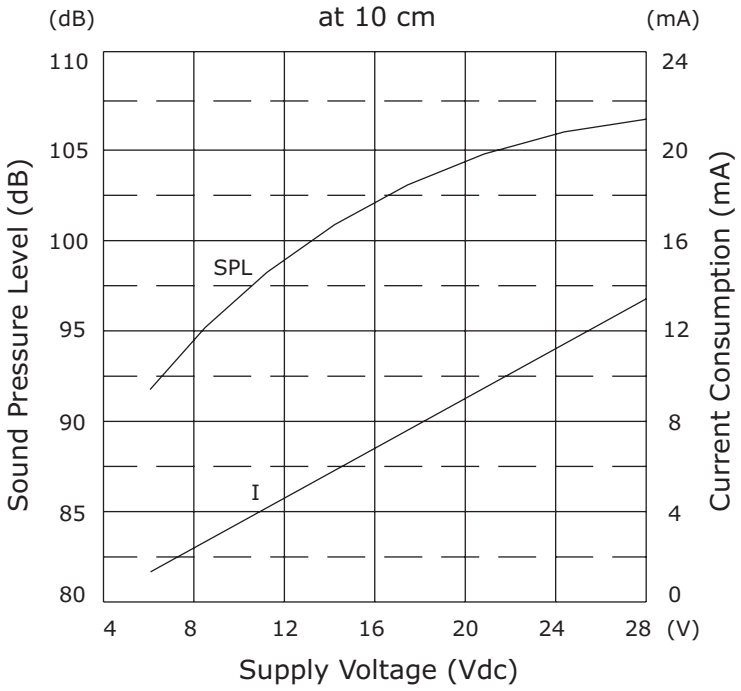

PACKAGING

units: mm

Carton Size: 585 x 315 x 330 mm
Carton QTY: 300 pcs per carton

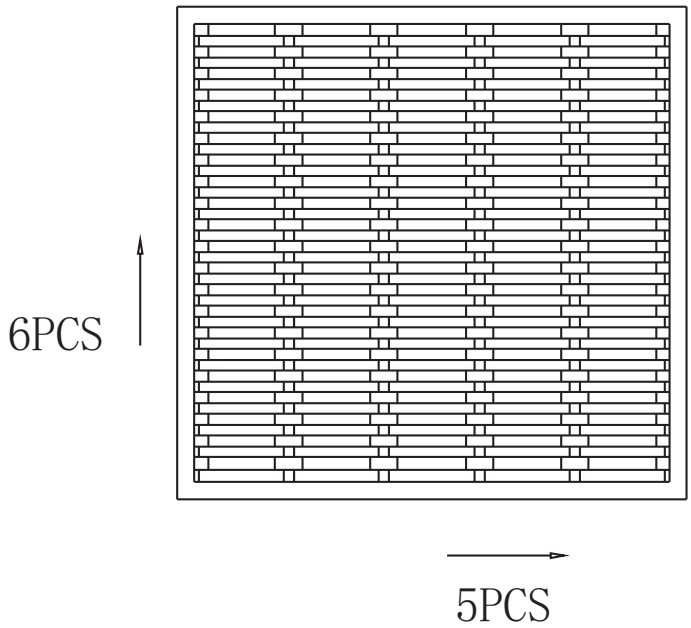

6×5PCS=30PCS/box

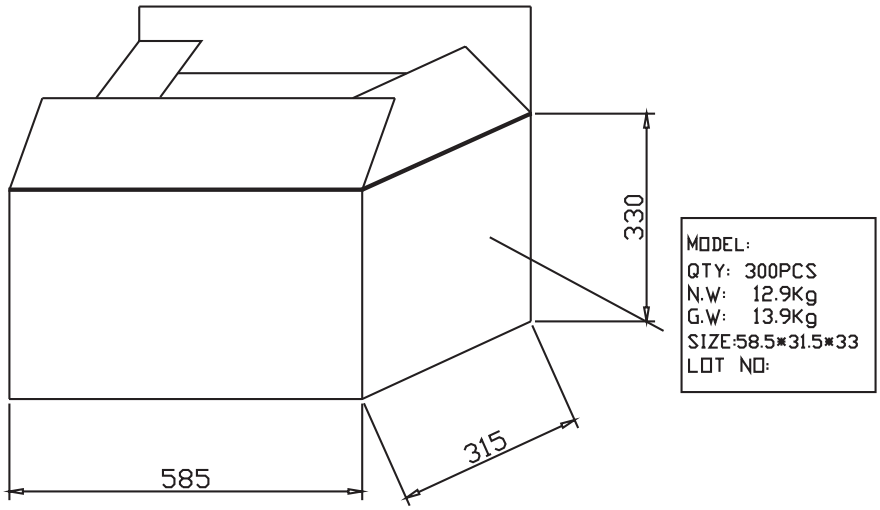

300PCS/CARTON

REVISION HISTORY

rev.	description	date
1.0	initial release	07/18/2019
1.01	brand update	12/19/2019
1.02	logo, datasheet style update	08/05/2022

The revision history provided is for informational purposes only and is believed to be accurate.

CUI Devices offers a one (1) year limited warranty. Complete warranty information is listed on our website.

CUI Devices reserves the right to make changes to the product at any time without notice. Information provided by CUI Devices is believed to be accurate and reliable. However, no responsibility is assumed by CUI Devices for its use, nor for any infringements of patents or other rights of third parties which may result from its use.

CUI Devices products are not authorized or warranted for use as critical components in equipment that requires an extremely high level of reliability. A critical component is any component of a life support device or system whose failure to perform can be reasonably expected to cause the failure of the life support device or system, or to affect its safety or effectiveness.