CUDEVICES

MODEL: CMI-9650C-030 | **DESCRIPTION:** MAGNETIC BUZZER INDICATOR

FEATURES

- includes driving circuit
- wire leads
- 78 dB SPL

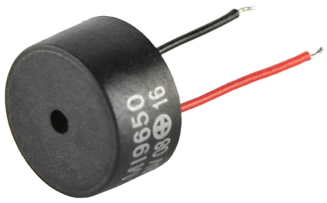

RoHS

SPECIFICATIONS

parameter	conditions/description	min	typ	max	units
rated voltage			3.0		Vdc
operating voltage		2.0		5.0	Vdc
current consumption	at rated voltage			15	mA
rated frequency		2,700		3,000	Hz
sound pressure level	at 10 cm (A-weight), rated voltage	78			dBA
dimensions	Ø9.6 x 5.0				mm
weight			0.6		g
material	PPO +10% glass				
terminal	wire type				
operating temperature		-20		60	°C
storage temperature		-30		70	°C
RoHS	yes				

Notes: 1. All specifications measured at 5~35°C, humidity at 45~85%, under 86~106 kPa pressure, unless otherwise noted.

SOLDERABILITY

parameter	conditions/description	min	typ	max	units
hand soldering	for maximum 5 seconds	330		380	°C

MECHANICAL DRAWING

units: mm
tolerance: ±0.5 mm

wire: UL1571 LF 32 AWG

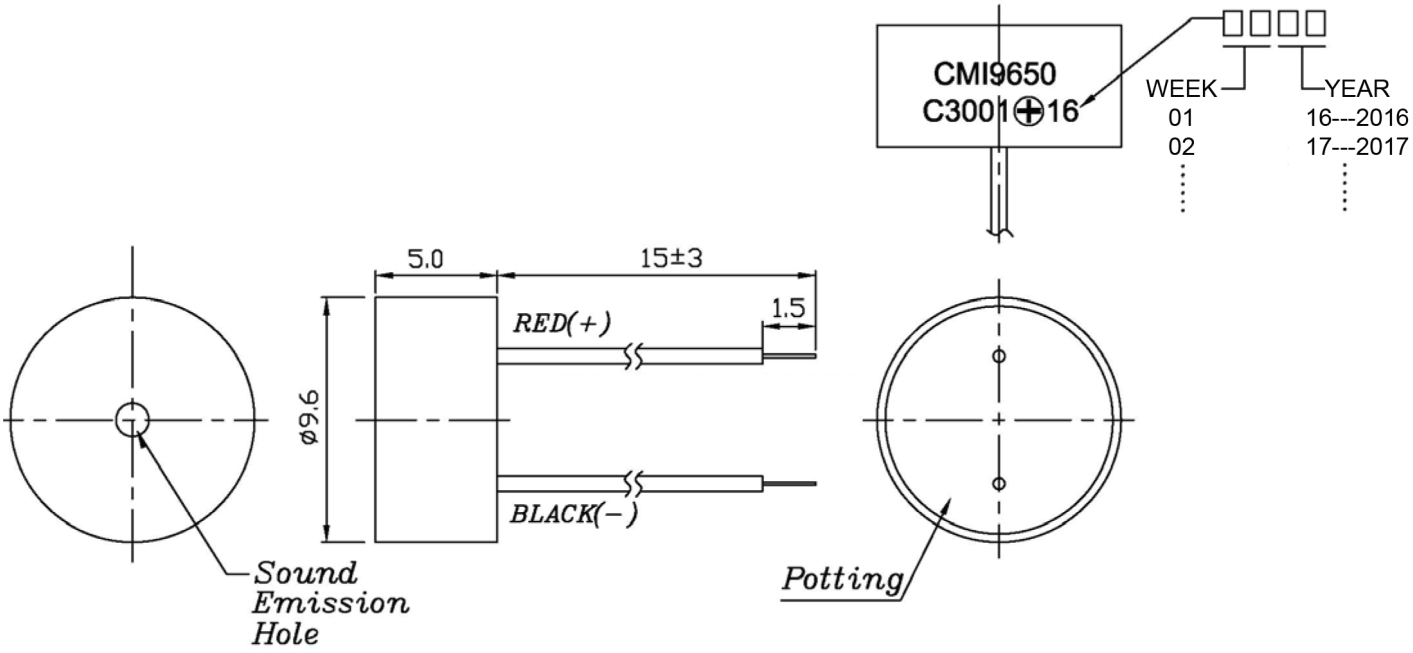

PERFORMANCE CURVES

Voltage vs. Sound Pressure Level
at 10 cm, 25°C

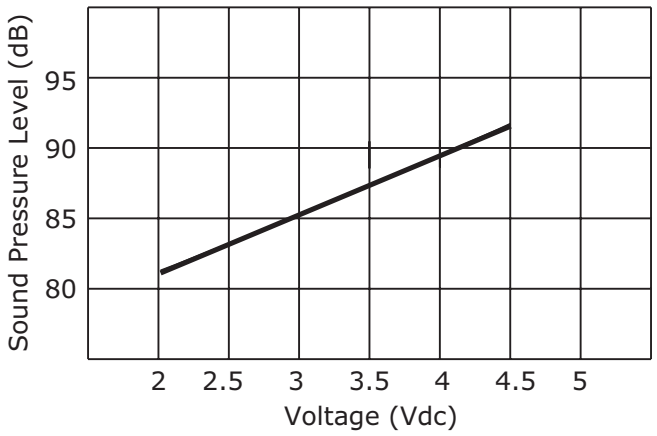

Voltage vs. Current Consumption
at 25°C

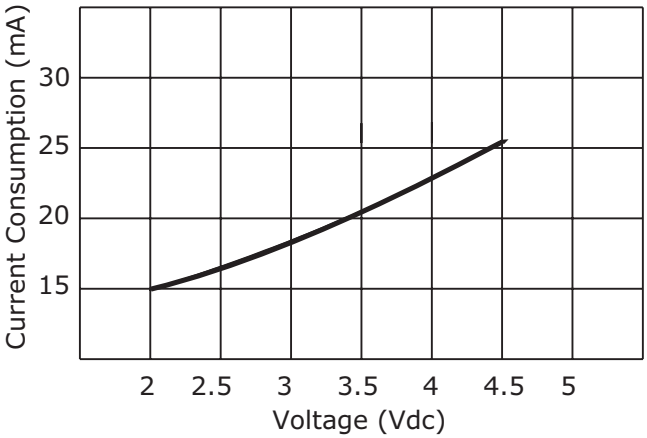

PACKAGING

units: mm

Tray Size: 240 x 160 x 30 mm
Carton Size: 520 x 420 x 280 mm
Tray QTY: 50 pcs per tray
Carton QTY: 2,500 pcs per carton

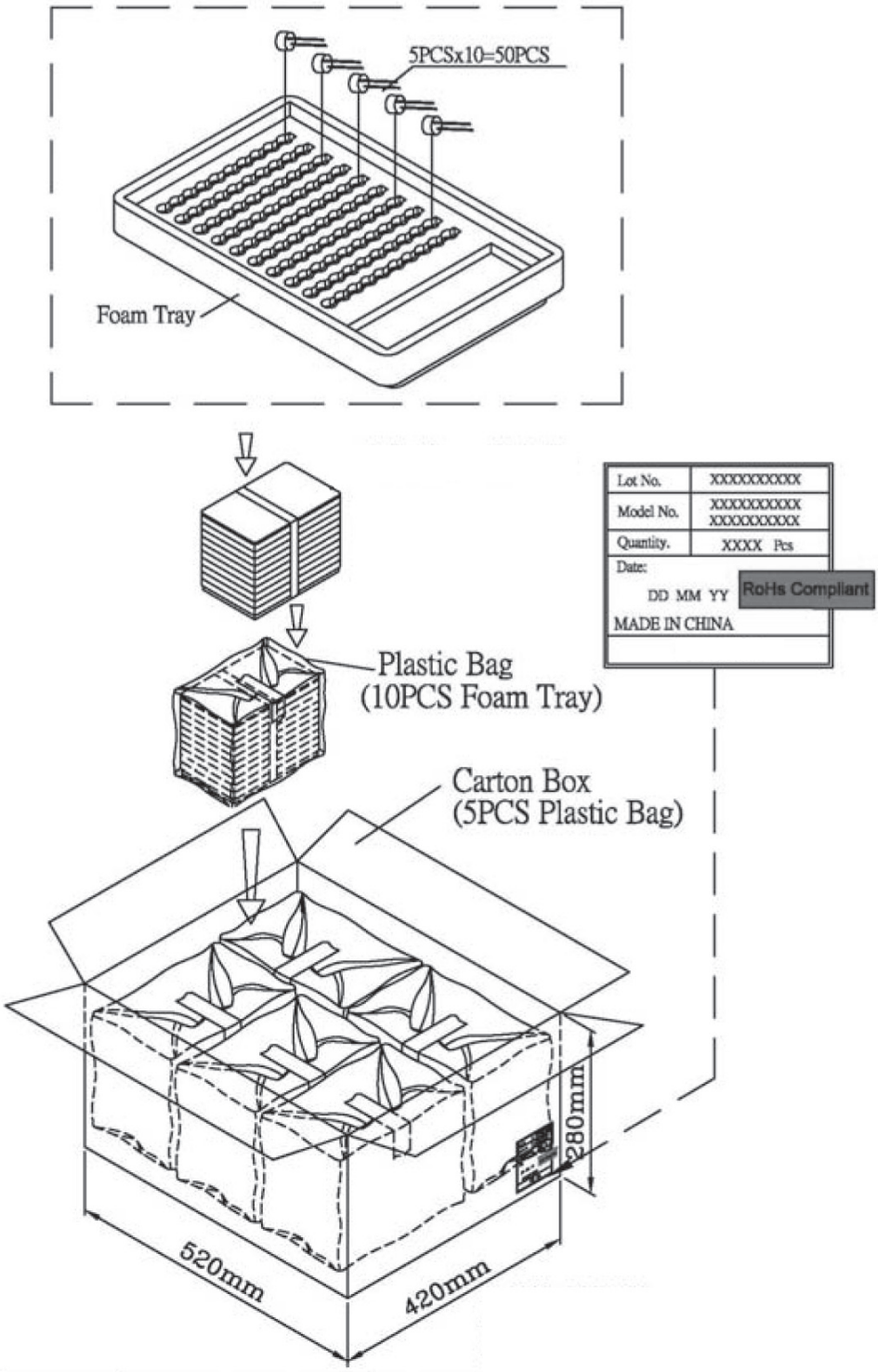

REVISION HISTORY

rev.	description	date
1.0	initial release	03/30/2016
1.01	brand update	11/22/2019
1.02	logo, datasheet style update	08/05/2022

The revision history provided is for informational purposes only and is believed to be accurate.

CUI Devices offers a one (1) year limited warranty. Complete warranty information is listed on our website.

CUI Devices reserves the right to make changes to the product at any time without notice. Information provided by CUI Devices is believed to be accurate and reliable. However, no responsibility is assumed by CUI Devices for its use, nor for any infringements of patents or other rights of third parties which may result from its use.

CUI Devices products are not authorized or warranted for use as critical components in equipment that requires an extremely high level of reliability. A critical component is any component of a life support device or system whose failure to perform can be reasonably expected to cause the failure of the life support device or system, or to affect its safety or effectiveness.

cuidevices.com