V-INFINITY
a division of CUI INC

date 08/2007

PART NUMBER: VCD6 series

DESCRIPTION: DC/DC converter

features
- **5-6W isolated output**
- **2:1 input range**
- **efficiency to 79%**
- **200 KHz switching frequency**

RoHS

model number	input voltage	output voltage	output current	input current no load	input current full load	efficiciency
VCD6-D12-S5	9-18VDC	5VDC	1000mA	20mA	570mA	73%
VCD6-D12-S12	9-18VDC	12VDC	470mA	30mA	626mA	75%
VCD6-D12-S15	9-18VDC	15VDC	400mA	30mA	667mA	75%
VCD6-D12-D12	9-18VDC	±12VDC	±230mA	35mA	630mA	73%
VCD6-D12-D15	9-18VDC	±15VDC	±190mA	35mA	650mA	73%
VCD6-D24-S5	18-36VDC	5VDC	1000mA	15mA	278mA	75%
VCD6-D24-S12	18-36VDC	12VDC	470mA	20mA	305mA	77%
VCD6-D24-S15	18-36VDC	15VDC	400mA	20mA	325mA	77%
VCD6-D24-D12	18-36VDC	±12VDC	±230mA	25mA	307mA	75%
VCD6-D24-D15	18-36VDC	±15VDC	±190mA	25mA	317mA	75%
VCD6-D48-S5	36-72VDC	5VDC	1000mA	10mA	135mA	77%
VCD6-D48-S12	36-72VDC	12VDC	470mA	15mA	149mA	79%
VCD6-D48-S15	36-72VDC	15VDC	400mA	15mA	158mA	79%
VCD6-D48-D12	36-72VDC	±12VDC	±230mA	20mA	149mA	77%
VCD6-D48-D15	36-72VDC	±15VDC	±190mA	20mA	154mA	77%

V-INFINITY
a division of CUI INC

PART NUMBER: VCD6 series **DESCRIPTION:** DC/DC converter

INPUT

input voltage range	12V:	9-18V
	24V:	18-36V
	48V:	36-72V
input filter		Pi type

OUTPUT

voltage accuracy	
single output	±1.0% max.
dual+output	±1.0% max.
dual-output	±3.0% max.
voltage balance dual output at full load	±1.0% max.
transient response: single 25% step load change	<500µ sec.
dual FL-1/2±1% error band	<500µ sec.
ripple & noise, 20MHz BW	10mV RMS.max. 75mV p-p max.
temperature coefficient	±0.02%/°C
short circuit protection	indefinite & current limit
line regulation[1] single/dual output	±0.2% max.
line regulation[2] single/dual output	±1.0% max.

GENERAL SPECIFICATIONS

efficiency		see table
isolation voltage		500VDC min.
isolation resistance		10^9Ohm
switching frequency		200KHz, typical
operating temperature range		-25°C to +71°C
case temperature(plastic case)		95°C max.
(copper case)		100°C max.
cooling		free-air convection
storage temperature range		-40°C to +100°C
EMI/RFI		six-sided continuous shield
dimensions		2x2x0.4 inches (50.8x50.8x10.2mm)
case material	standard models	non-conductive black plastic
	suffix “M” models	black-coated copper with non-conductive base

NOTES:
1. measured from high line to low line
2. measured from full load to1/4 load
3. determine the correct fuse size by calculating the maximum DC current drain at low line input, maximum load and then adding 20 to 25% to get desired fuse size.
4. alternative pin configuration suffix “S”

PART NUMBER: VCD6 series **DESCRIPTION:** DC/DC converter

Dimensions (mm)

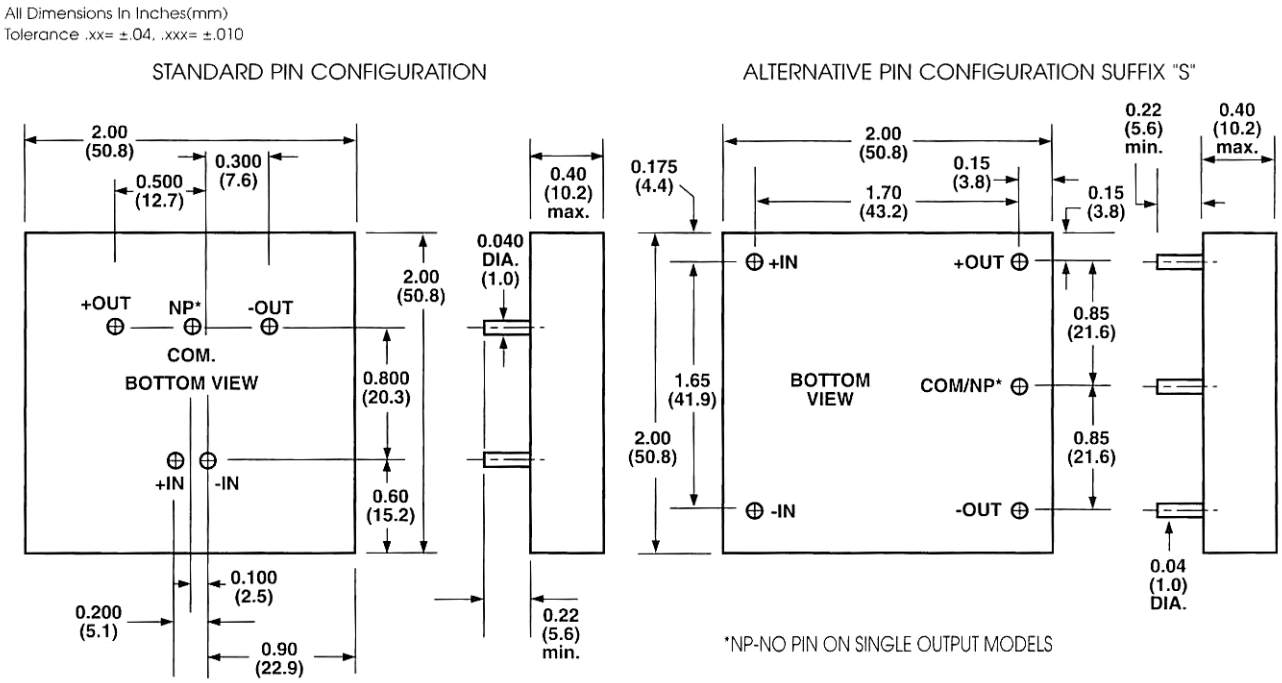
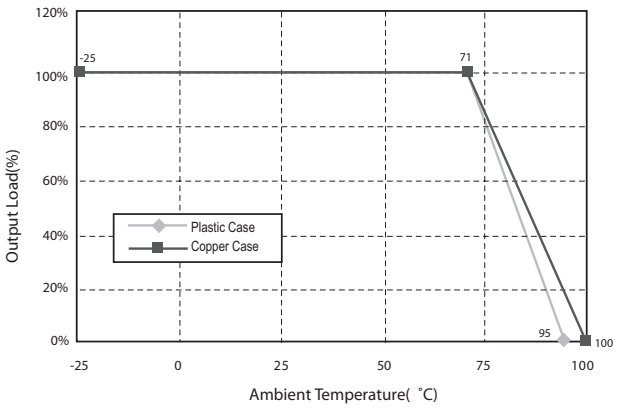
Derating Curve