V-INFINITY
a division of CUI INC

date 06/2009

PART NUMBER: PTK25 **DESCRIPTION:** dc-dc converter

features
- **industry standard pin out**
- **wide 2:1 input range**
- **fully isolated**
- **output voltage trimmable**
- **output on/off control**
- **over-current protection**
- **over-voltage protection**
- **six-sided EMI shielding**
- **constant switching frequency**
- **high efficiency**
- **compact size 2.0”x2.0”x0.4”**
- **-40°C~85°C models available**
- **3 year warranty**

RoHS

MODEL [1]	output power (max)	input voltage	output voltage	output current (max)	ripple & noise [2] mV P-P	efficiency (typ.)
PTK25-D24-S3	19.8W	18-36VDC	3.3VDC	6.0A	100	80%
PTK25-D24-S5	25.0W	18-36VDC	5VDC	5.0A	100	85%
PTK25-D24-S12	24.0W	18-36VDC	12VDC	2.0A	120	89%
PTK25-D24-S15	24.0W	18-36VDC	15VDC	1.6A	150	89%
PTK25-D24-D5	25.0W	18-36VDC	±5VDC	2.5A	75/75	84%
PTK25-D24-D12	24.0W	18-36VDC	±12VDC	1.0A	120/120	88%
PTK25-D24-D15	24.0W	18-36VDC	±15VDC	0.8A	150/150	87%
PTK25-D24-T312	19.95W	18-36VDC	3.3VDC/±12VDC	3.5A/0.35A	75/120/120	83%
PTK25-D24-T512	25.9W	18-36VDC	5VDC/±12VDC	3.5A/0.35A	75/120/120	84%
PTK25-D24-T315	19.95W	18-36VDC	3.3VDC/±15VDC	3.5A/0.28A	75/150/150	83%
PTK25-D24-T515	25.0W	18-36VDC	5VDC/±15VDC	3.5A/0.25A	75/150/150	84%
PTK25-D48-S3	19.8W	36-72VDC	3.3VDC	6.0A	100	81%
PTK25-D48-S5	25.0W	36-72VDC	5VDC	5.0A	100	85%
PTK25-D48-S12	24.0W	36-72VDC	12VDC	2.0A	120	89%
PTK25-D48-S15	24.0W	36-72VDC	15VDC	1.6A	150	89%
PTK25-D48-D5	25.0W	36-72VDC	±5VDC	2.5A	75/75	84%
PTK25-D48-D12	24.0W	36-72VDC	±12VDC	1.0A	120/120	88%
PTK25-D48-D15	24.0W	36-72VDC	±15VDC	0.8A	150/150	87%
PTK25-D48-T312	19.95W	36-72VDC	3.3VDC/±12VDC	3.5A/0.35A	75/120/120	83%
PTK25-D48-T512	25.9W	36-72VDC	5VDC/±12VDC	3.5A/0.35A	75/120/120	84%
PTK25-D48-T315	19.95W	36-72VDC	3.3VDC/±15VDC	3.5A/0.28A	75/150/150	83%
PTK25-D48-T515	25.0W	36-72VDC	5VDC/±15VDC	3.5A/0.25A	75/150/150	84%

NOTE: 1. All models are also available in an extended temperature range of -40°C~85°C. For these models, append “M” to the model number, e.g. PTK25-Q48-S5M.

2. Ripple & noise measured with a 20MHz bandwidth, off a 10uF electrolytic and a 0.1uF ceramic cap in parallel at the ouptut.

Discontinued

PART NUMBER: PTK25 **DESCRIPTION:** dc-dc converter

INPUT

parameter	conditions/description	min	nom	max	units
input voltage range		18	24	36	VDC
		36	48	72	VDC
remote on/off control	output turn-on[3]	2.5V	(open)	5.5V	
	output turn-off	0V	(short)	0.8V	
switching frequency	constant		300		KHz

NOTE: 3 output defaults to "on" when there is no connection to the "CNT" pin.

OUTPUT

parameter	conditions/description	min	nom	max	units
output trim range	with external trim resistors	-5%		+5%	
set point accuracy	single output	-2%		+2%	
	dual output	-3%		+3%	
line regulation	single output models	-0.25%		+0.25%	
(low line to high line)	dual output models	-2.5%		+2.5%	
	triple: main output (Vout)	-0.25%		+0.25%	
	auxillary outputs (+Vaux / -Vaux)	-5%		+5%	
load regulation	single output models- no load to full load	-0.25%		+0.25%	
	dual output models- balanced loads	-2.5%		+2.5%	
	triple: main output (Vout)	-0.25%		+0.25%	
	auxillary outputs (+Vaux / -Vaux)- with 10% load on Vout and balanced loads on+Vaux and -Vaux	-5%		+5%	
minimum load	converters will not be damaged if loading conditions are less than minimum specified loads, but regulation specs may not be met[4]				
ripple and noise	see chart				

NOTE: 4 single output: no min. load required, dual: 10%, triple: balanced loads

PROTECTION

parameter	conditions/description	min	nom	max	units
over-current	continuous auto recovery [5]	105%		135%	
over-voltage	internally zener clamped [5]	110%		140%	

NOTE: 5 continuous operation in a protected state may compromise long-term reliability.

GENERAL

parameter	conditions/description	min	nom	max	units
efficiency	typical at full load	77%		83%	
isolation voltage	input/case, input/output, output/case	500			VAC
insulation resistance	at 500 VDC	100M			Ohms
agency standards	approved to UL60950(E222889), CSA C22.2 No. 60950, TUV EN60950 (single output only)				
case material			Zn		
material flammability		94 V-0			
weight			80 (2.82)		grams (ounces)
MTBF	MIL-HDBK-217F		470k		hours
operating temperature	regular models - see derating curve.	-20		+71	°C
	extended temperature models	-40		+85	°C
storage temperature		-40		+105	°C
humidity	operating (non-condensing)	5%		95%	RH
washability	not intended for aqueous wash				

Discontinued

PART NUMBER: PTK25 **DESCRIPTION:** dc-dc converter

DIMENSIONS (mm)

NOTES
1. All dimensions are in inches and(mm).
2. Weight : 75g or less

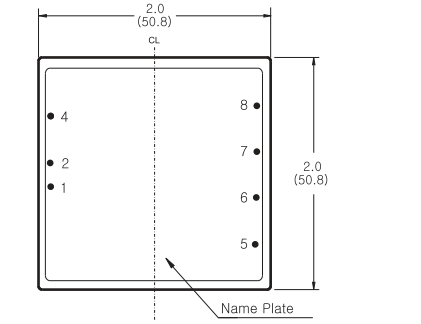

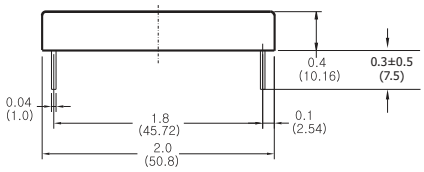

Pin Assignments

Single Output	Dual Output	Triple Output
1. +Vin	1. +Vin	1. +Vin
2. -Vin	2. -Vin	2. -Vin
3. No pin	3. No pin	3. No pin
4. CNT	4. CNT	4. CNT
5. NC	5. +Vout	5. +Vaux
6. +Vout	6. Com	6. +Vout
7. -Vout	7. -Vout	7. Com
8. Trim	8. Trim	8. -Vaux

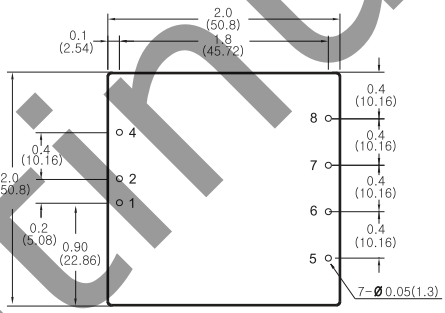

PCB Layout

PIN DEFINITIONS

+Vin:	Input positive terminal
-Vin:	Input negative terminal
CNT:	Remote On/Off control of output voltage. Referenced to -Vin
+Vout:	Main output positive terminal
-Vout:	Output negative terminal
+Vaux:	Positive auxiliary output
-Vaux:	Negative auxiliary output
Com:	Common node for dual- or triple-output models
Trim:	For trimming output voltage on single- or dual-output models

DERATING CURVES

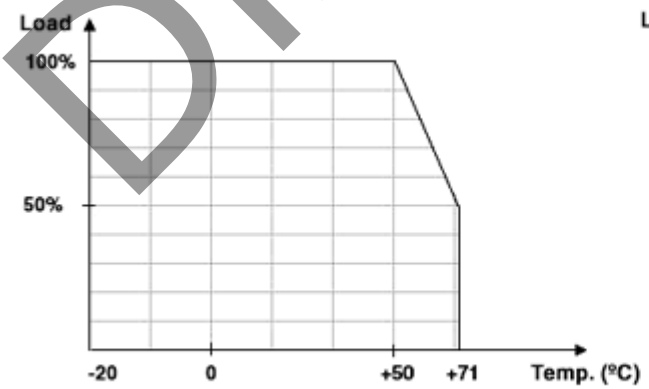

Regular Version

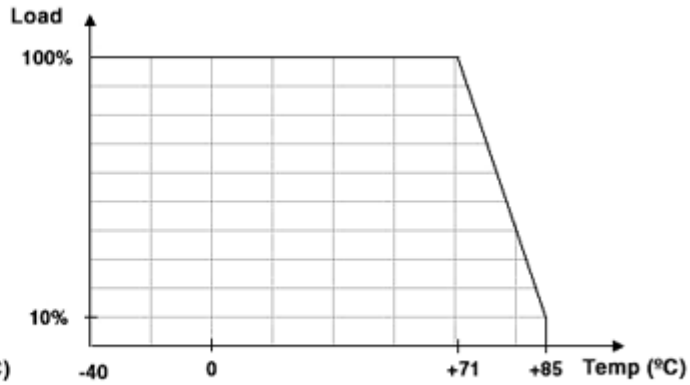

M Version

Discontinued

PART NUMBER: PTK25 **DESCRIPTION:** dc-dc converter

APPLICATION NOTES

1. OUTPUT TRIMMING

The output voltages are preset to nominal values as indicated by the models table at the factory. If desired, the output voltage may optionally be trimmed to a different value (+/- 10%) with external resistors and/or potentiometer as shown below.

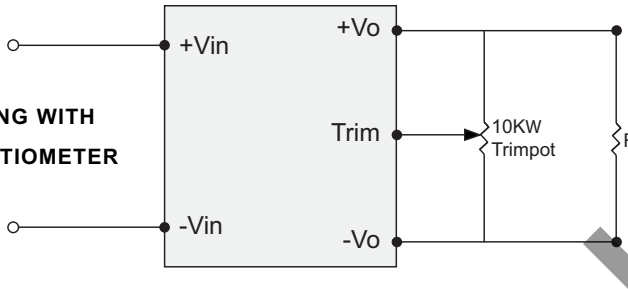

FIGURE 1. TRIMMING WITH EXTERNAL POTENTIOMETER

To trim the output voltage with fixed resistors, the output voltage can be calculated as follows.

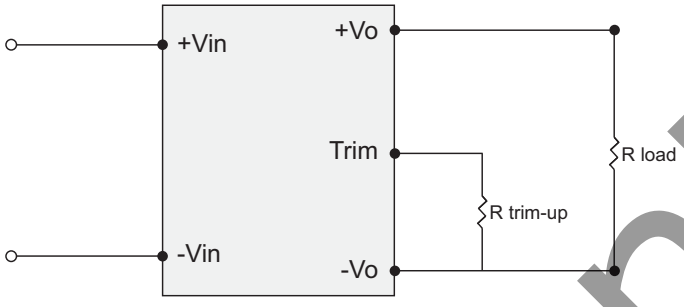

Trim-Up

FIGURE 2: TRIM-UP VOLTAGE SETUP

$$R_{trim_up} = \frac{V_r \cdot R_1 \cdot R_2}{R_2 \cdot (V_o - V_r) - V_r \cdot R_1}$$

The value of $R_{trim-up}$ is defined as:

Where: $R_{trim-up}$ is the external resistor in $K\Omega$. V_o is the desired output voltage. R_1 and R_2 and V_r are internal to the unit and are defined in Table 1. For example to trim up the PTK25-D5-D12 up by 5% to 25.2 V, $R_{trim-up}$ is calculated as follows:

$V_o = 25.2 \,/\, R_1 = 21\ \text{K}\Omega \,/\, R_2 = 2.43\ \text{K}\Omega \,/\, V_r = 2.5$

$$R_{trim_up} = \frac{2.5 \cdot 21 \cdot 2.43}{2.43 \cdot (25.2 - 2.5) - 2.5 \cdot 21} = 47.94\ \text{K}\Omega$$

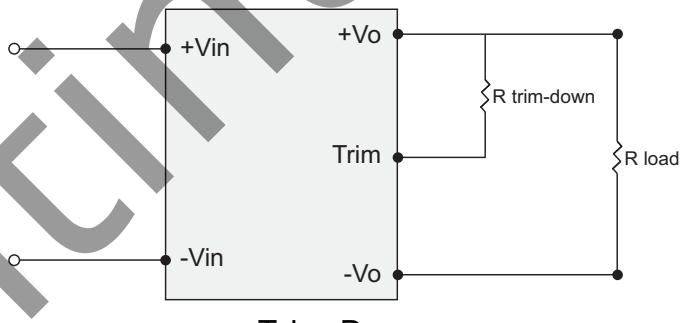

Trim-Down

FIGURE 3: TRIM-DOWN VOLTAGE SETUP

$$R_{trim_down} = \frac{(V_o - V_r) \cdot R_1 \cdot R_2}{V_r \cdot R_1 - (V_o - V_r) \cdot R_2}$$

The value of $R_{trim-down}$ is defined as:

Where: $R_{trim-down}$ is the external resistor in $K\Omega$. V_o is the desired output voltage. R_1 and R_2 and V_r are internal to the unit and are defined in Table 1. For example to trim down the PTK25-D5-D12 down by 5% to 22.8 V, $R_{trim-down}$ is calculated as follows:

$V_o = 22.8 \,/\, R_1 = 21\ \text{K}\Omega \,/\, R_2 = 2.43\ \text{K}\Omega \,/\, V_r = 2.5$

$$R_{trim_down} = \frac{(22.8 - 2.5) \cdot 21 \cdot 2.43}{2.5 - 2.1\ (22.8 - 2.5) \cdot 2.43} = 326.68\ \text{K}\Omega$$

Table 1

Model	R1 (KΩ)	R2 (KΩ)	Vr (V)
PTK25-DXX-S3.3	1.13	0.68	1.25
PTK25-DXX-S5	2.43	2.43	2.5
PTK25-DXX-S12	9.31	2.43	2.5
PTK25-DXX-S15	12.1	2.4	2.5
PTK25-DXX-D5	7.32	2.43	2.5
PTK25-DXX-D12	21	2.43	2.5
PTK25-DXX-D15	26.7	2.43	2.5

Discontinued