CUI INC®

SERIES: PBK-1 | **DESCRIPTION:** AC-DC POWER SUPPLY

DISCONTINUED

FEATURES

- up to 1 W continuous output
- compact SIP package
- single regulated outputs from 5~24 V
- 3,000 Vac isolation
- over current and short circuit protections
- CE, UL60950-1 safety approval
- wide input voltage: 70~400 Vdc (85~264 Vac)
- efficiency up to 68%

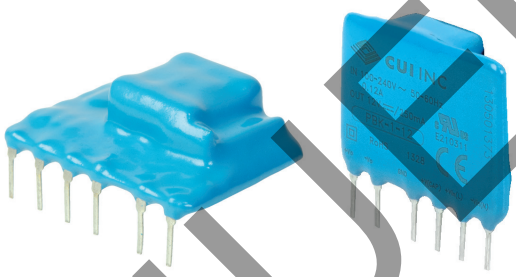

RoHS c UL us CE

MODEL

MODEL	output voltage (Vdc)	output current max (mA)	output power max (W)	ripple and noise[1] max (mVp-p)	efficiency[2] typ (%)
PBK-1-5	5	200	1	150	61
PBK-1-9	9	111	1	150	66
PBK-1-12	12	83	1	150	67
PBK-1-15	15	67	1	150	67
PBK-1-24	24	42	1	150	68

Note: 1. Measured at 20 MHz bandwidth, see Test Configuration section.
2. At 230 Vac.

PART NUMBER KEY

PBK-1- XX - X

- PBK-1- : Base Number
- XX : Output Voltage
- X : Orientation
  "blank" = vertical
  B = right-angle

DISCONTINUED

INPUT

parameter	conditions/description	min	typ	max	units
voltage		85 70		264 400	Vac Vdc
frequency		47		63	Hz
current	at 115 Vac at 230 Vac			120 60	mA mA
inrush current	at 115 Vac at 230 Vac		10 20		A A
no load power consumption				0.5	W
input fuse	1 A/250 V, slow-blow type (external, required)				

OUTPUT

parameter	conditions/description	min	typ	max	units
output current		10			%
capacitive load	5 Vdc output models 9 Vdc output models all other models			470 150 100	µF µF µF
line regulation	at full load		±1.5	±2	%
load regulation	at 10%~100% load		±2.5	±3	%
voltage set accuracy	5 Vdc output models all other models			±10 ±5	% %
hold-up time	at 115 Vac at 230 Vac	80 300			ms ms
switching frequency				50	kHz
temperature coefficient			±0.1		%/°C

PROTECTIONS

parameter	conditions/description	min	typ	max	units
short circuit protection	hiccup, continuous, auto restart				
over current protection	auto restart	120			%

SAFETY & COMPLIANCE

parameter	conditions/description	min	typ	max	units
isolation voltage	input to output, for 1 minute	3,000			Vac
safety approvals	UL60950-1, CE				
safety class	Class II				
conducted emissions	CISPR32/EN55032 external circuit required, Class A (see figure 2); Class B (see figure 3)				
radiated emissions	CISPR32/EN55032 external circuit required, Class A (see figure 2); Class B (see figure 3)				
ESD	IEC/EN61000-4-2 Class B, contact ±4 kV				
radiated immunity	IEC/EN61000-4-3 Class A, 10V/m (external circuit required, see figure 3)				
EFT/burst	IEC/EN61000-4-4 Class B, ±2 kV (external circuit required, see figure 2)				
	IEC/EN61000-4-4 Class B, ±4 kV (external circuit required, see figure 3)				
surge	IEC/EN61000-4-5 Class B, ±1 kV/±2 kV (external circuit required, see figure 3)				
conducted immunity	IEC/EN61000-4-6 Class A, 3 Vr.m.s (external circuit required, see figure 3)				
voltage dips & interruptions	IEC/EN61000-4-11 Class B, 0%-70% (external circuit required, see figure 3)				
MTBF	as per MIL-HDBK-217F, 25°C	300,000			hours
RoHS	2011/65/EU				

ENVIRONMENTAL

parameter	conditions/description	min	typ	max	units
operating temperature		-25		85	°C
storage temperature		-25		105	°C
humidity	non-condensing			85	%

EFFICIENCY CURVES

effieciency vs. input voltage (full load)

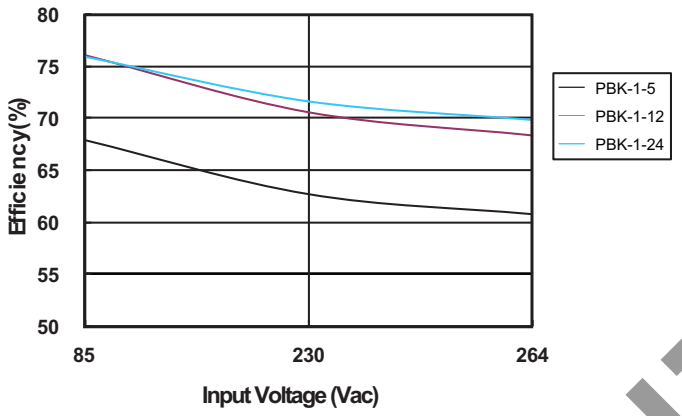

effieciency vs. output load (at 230 Vac)

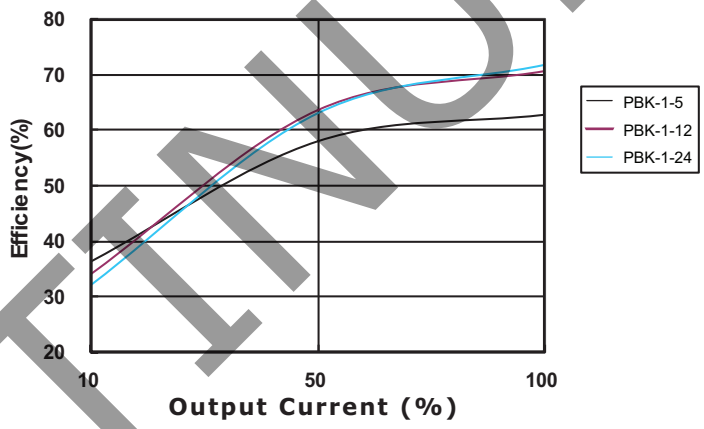

DISCONTINUED

SOLDERABILITY

parameter	conditions/description	min	typ	max	units
hand soldering	for 3~5 seconds	350	360	370	°C
wave soldering	for 5~10 seconds	255	260	265	°C

MECHANICAL

parameter	conditions/description	min	typ	max	units
dimensions	vertical: 35 x 11 x 25 right-angle: 35 x 13 x 25				mm mm
material	UL94V-0				
weight			8		g

MECHANICAL DRAWING

VERTICAL ORIENTATION

units: mm[inch]
tolerance: ±0.5[±0.020]
pin tolerance: ±0.1[±0.004]

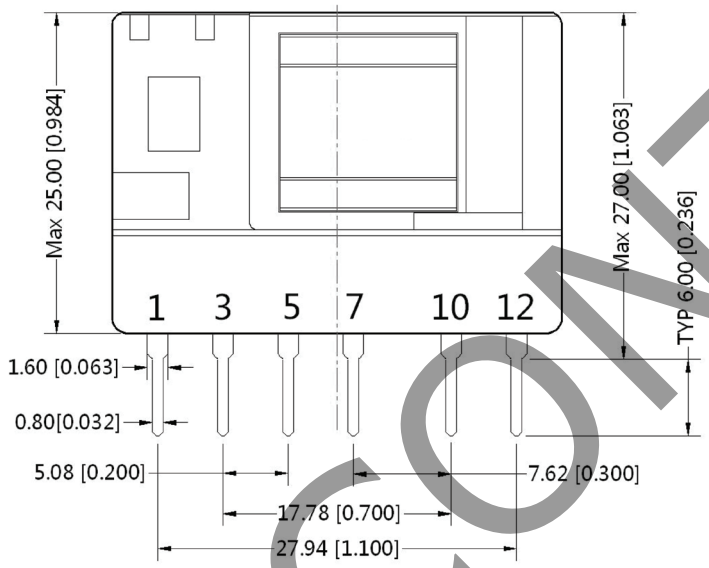

Front View

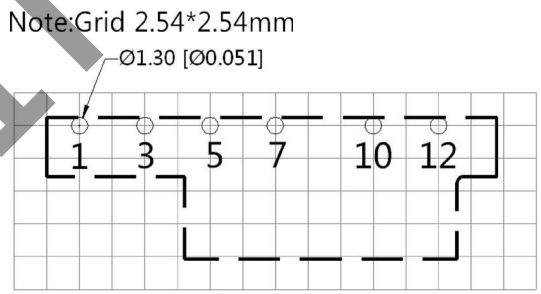

Top View
PCB Layout

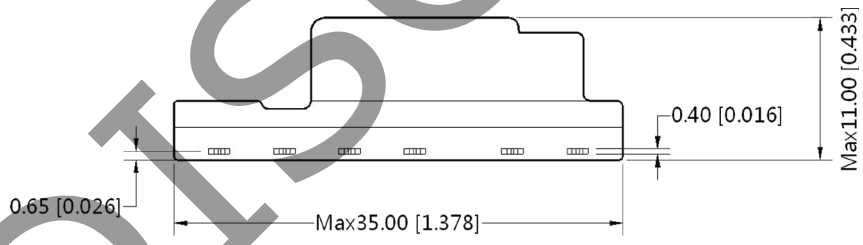

Bottom View

PIN CONNECTIONS	
PIN	FUNCTION
1	-Vin (N)
3	+Vin (L)
5	+V(CAP)
7	-V(CAP)
10	-Vo
12	+Vo

Note: 1. It is required to add C1 between pins 5 & 7 (see application circuits).

DISCONTINUED

MECHANICAL DRAWING (CONTINUED)

RIGHT-ANGLE ORIENTATION

units: mm[inch]
tolerance: ±0.5[±0.020]
pin tolerance: ±0.1[±0.004]

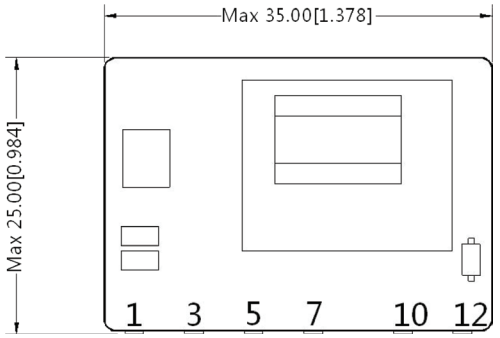

Front View

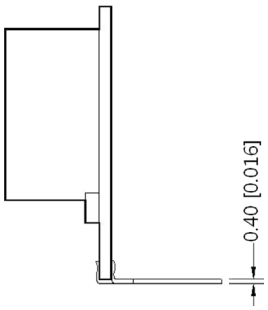

Side View

Note:Grid 2.54*2.54mm

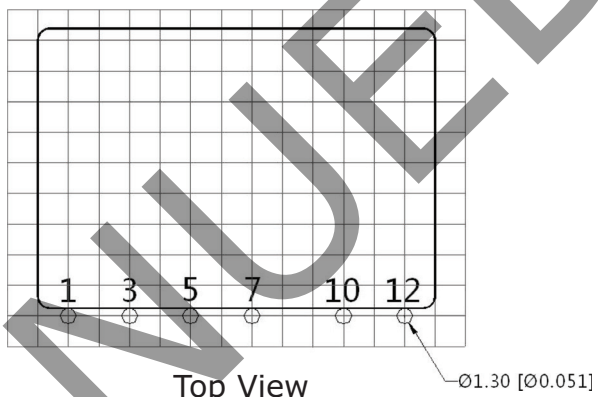

Top View
PCB Layout

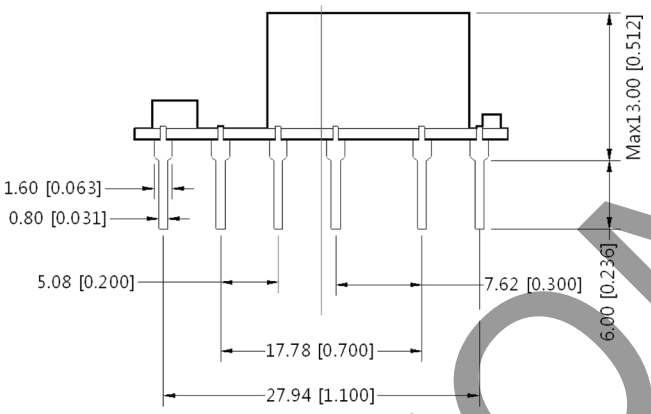

Bottom View

PIN CONNECTIONS	
PIN	FUNCTION
1	-Vin (N)
3	+Vin (L)
5	+V(CAP)
7	-V(CAP)
10	-Vo
12	+Vo

Note: 1. It is required to add C1 between pins 5 & 7 (see application circuits).

TEST CONFIGURATION

Figure 1

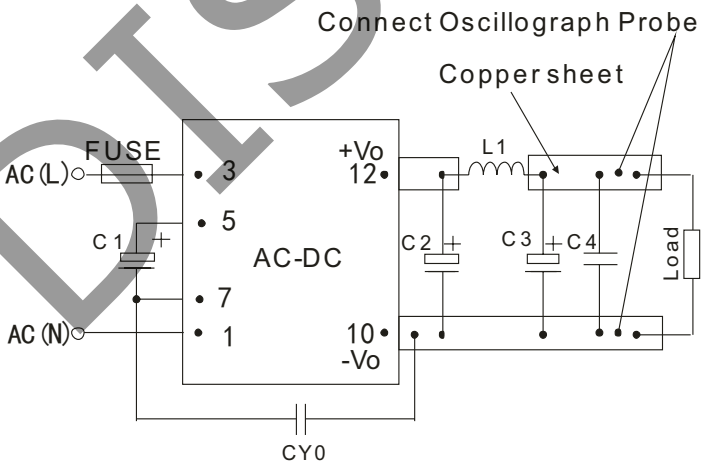

Table 1

Recommended External Circuit Components						
V_{OUT} (Vdc)	C1[1]	C2[1]	L1[1]	C3[1]	C4	CY0 (Y1 capacitor)
5	10µF/400V	150µF/35V	2.2µH	68µF/35V	0.1µF/50V	1nF/400Vac
9	10µF/400V	150µF/35V	2.2µH	68µF/35V	0.1µF/50V	1nF/400Vac
12	10µF/400V	100µF/35V	2.2µH	68µF/35V	0.1µF/50V	1nF/400Vac
15	10µF/400V	100µF/35V	2.2µH	68µF/35V	0.1µF/50V	1nF/400Vac
24	10µF/400V	100µF/35V	2.2µH	68µF/35V	0.1µF/50V	1nF/400Vac

Note: 1. Required components.
2. 1 A/250 V fuse required.

DISCONTINUED

TYPICAL APPLICATION CIRCUIT

Figure 2

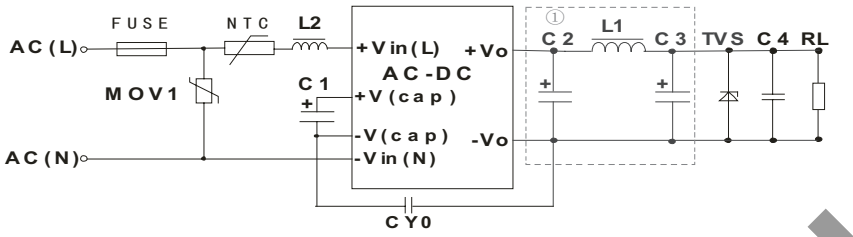

Table 2

Recommended External Circuit Components											
V_{OUT} (Vdc)	C1[1]	L2	C2[1,2]	L1[1]	C3[1]	C4	CY0	FUSE[1]	TVS	NTC	MOV1
5	10µF/400V	4.7mH	150µF/35V	2.2µH	68µF/35V	0.1µF/50V	1nF/400Vac	1A/250V	SMBJ7.0A	5D-9	S14K350
9	10µF/400V	4.7mH	150µF/35V	2.2µH	68µF/35V	0.1µF/50V	1nF/400Vac	1A/250V	SMBJ12A	5D-9	S14K350
12	10µF/400V	4.7mH	100µF/35V	2.2µH	68µF/35V	0.1µF/50V	1nF/400Vac	1A/250V	SMBJ20A	5D-9	S14K350
15	10µF/400V	4.7mH	100µF/35V	2.2µH	68µF/35V	0.1µF/50V	1nF/400Vac	1A/250V	SMBJ20A	5D-9	S14K350
24	10µF/400V	4.7mH	100µF/35V	2.2µH	68µF/35V	0.1µF/50V	1nF/400Vac	1A/250V	SMBJ30A	5D-9	S14K350

Note: 1. Required components.
2. When 5 Vdc model is operating in the -25~0C or 55~85C range, C2 needs to be a 270 µF/16 V solid capacitor.

EMC RECOMMENDED CIRCUIT

Figure 3

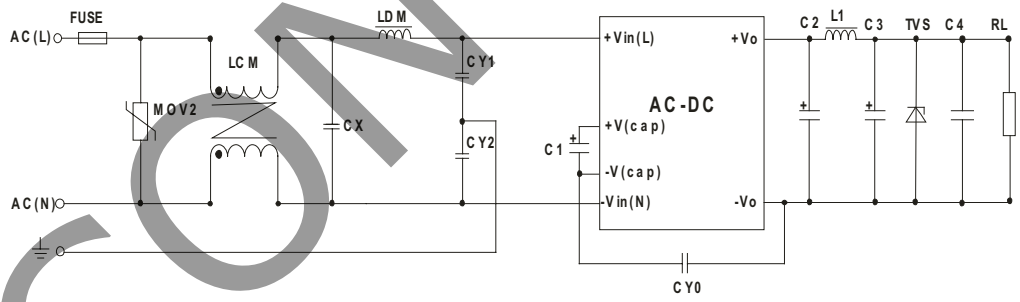

Table 3

Recommended External Circuit Components	
MOV2	S14K350
CY1, CY2	1nF/400Vac
CX	0.1µF/275Vac
LCM	3.5mH
LDM	5mH
FUSE	1A/250V, slow blow

Note: Also refer to Table 2.

Notes:
1. C1 and C3 are electrolytic capacitors. They are required for both AC input and DC input.
2. For AC input, C1 is used as a filter capacitor. The recommended C1 value is 10 µF/400 V.
3. For DC input, C1 is used as an EMC filter capacitor. The recommended C1 value is 10µF/400V. When the input voltage is above 370VDC, we recommend a 10µF/450V capacitor.
4. C2 and C3 are output filer capacitors, we recommend high frequency and low impedance electrolytic capacitors. For capacitance and rated ripple current of capacitors refer to the datasheets provided by the manufacturers, voltage derating of capacitors should be 80% or above.
5. C4 is a ceramic capacitor which is used to filter high frequency noise. C2, C3 and L1 form a pi-type filter circuit. For current of L1 and L2 refer to the datasheets provided by the manufacturers, current derating should be 80% or above. TVS is a recommended component to protect post-circuits (if converter fails). We recommend using a 5D-9 external input NTC.
6. For standard EMC requirements, please refer to figure 2. If a higher EMC is required, please refer to figure 3.
7. All specifications measured at Ta=25C, humidity <75%, 115 Vac & 230 Vac input voltage, and rated output load, unless otherwise specified.

DISCONTINUED

REVISION HISTORY

rev.	description	date
1.0	initial release	08/09/2013
1.01	added bent pin model options, updated emc recommendations	03/25/2014
1.02	performance updates due to control IC change	02/02/2018

The revision history provided is for informational purposes only and is believed to be accurate.

DISCONTINUED

CUI INC®

Headquarters
20050 SW 112th Ave.
Tualatin, OR 97062
800.275.4899

Fax 503.612.2383
cui.com
techsupport@cui.com

CUI offers a two (2) year limited warranty. Complete warranty information is listed on our website.

CUI reserves the right to make changes to the product at any time without notice. Information provided by CUI is believed to be accurate and reliable. However, no responsibility is assumed by CUI for its use, nor for any infringements of patents or other rights of third parties which may result from its use.

CUI products are not authorized or warranted for use as critical components in equipment that requires an extremely high level of reliability. A critical component is any component of a life support device or system whose failure to perform can be reasonably expected to cause the failure of the life support device or system, or to affect its safety or effectiveness.