CUDEVICES

MODEL: CPE-353A | **DESCRIPTION:** PIEZO BUZZER INDICATOR

FEATURES

- wire leads with panel-mount tabs
- 12 Vdc rating
- 88 dB
- 2.8 kHz rated frequency slow pulse

RoHS

SPECIFICATIONS

parameter	conditions/description	min	typ	max	units
rated voltage			12		Vdc
operating voltage		3		20	Vdc
current consumption	at rated voltage			10	mA
rated frequency		2,300	2,800	3,300	Hz
sound pressure level	at 30 cm, rated voltage	88			dB
tone	slow pulse at rated voltage	1.2	1.5	1.8	Hz
dimensions	Ø41.8 x 16.0				mm
weight				14.2	g
material	ABS UL94 1/16" HB High Heat (black)				
terminal	wire leads				
operating temperature		-30		85	°C
storage temperature		-40		95	°C
RoHS	yes				

Notes: 1. All specifications measured at 5~35°C, humidity at 45~85%, under 86~106kPa pressure, unless otherwise noted.

MECHANICAL DRAWING

units: mm
tolerance: ±0.5 mm

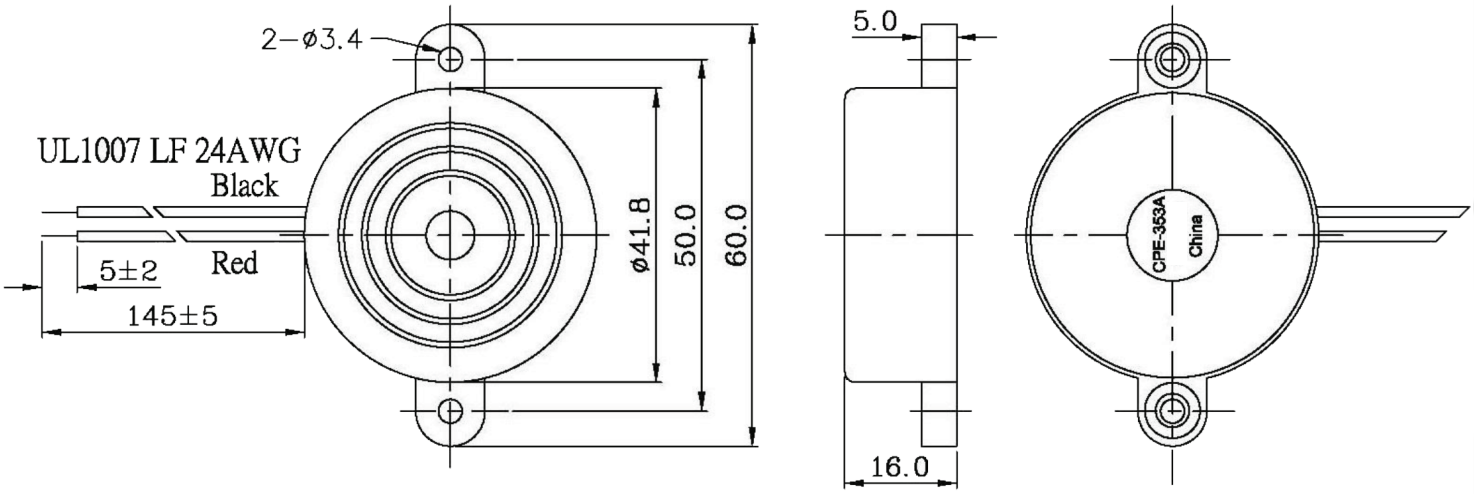

PERFORMANCE CURVES

P: Voltage vs. Sound Pressure Level
I: Voltage vs. Current Consumption

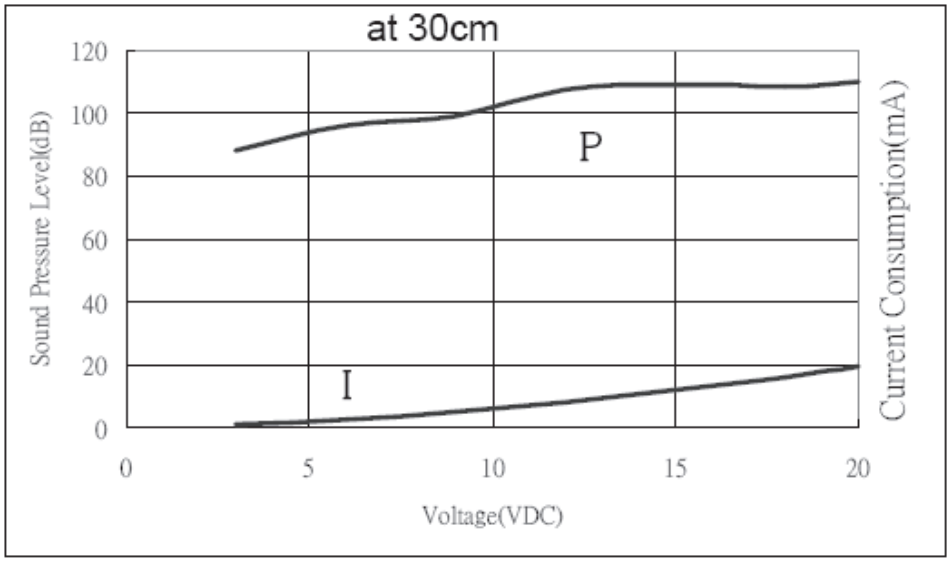

REVISION HISTORY

rev.	description	date
1.0	initial release	11/12/2007
1.01	applied new spec template	07/23/2015
1.02	logo, datasheet style update	08/05/2022

The revision history provided is for informational purposes only and is believed to be accurate.

CUI Devices offers a one (1) year limited warranty. Complete warranty information is listed on our website.

CUI Devices reserves the right to make changes to the product at any time without notice. Information provided by CUI Devices is believed to be accurate and reliable. However, no responsibility is assumed by CUI Devices for its use, nor for any infringements of patents or other rights of third parties which may result from its use.

CUI Devices products are not authorized or warranted for use as critical components in equipment that requires an extremely high level of reliability. A critical component is any component of a life support device or system whose failure to perform can be reasonably expected to cause the failure of the life support device or system, or to affect its safety or effectiveness.

cuidevices.com