CUDEVICES

MODEL: CMS-15116-SP | **DESCRIPTION:** SPEAKER

FEATURES

- 6 Ω impedance
- micro-speaker
- small footprint
- spring leads

RoHS

SPECIFICATIONS

parameter	conditions/description	min	typ	max	units
input power	maximum power: IEC-60268-5, filter 60s on/120s off, 10 cycles at room temp in 1 cc closed box		0.94	1.3	W
impedance	at 2.0 kHz, 1.0 V	5.1	6	6.9	Ω
resonant frequency (Fo)	at 1.0 V at 1.0 V in 1cc closed box	467.5 765	550 900	632.5 1,035	Hz Hz
frequency response	output SPL ±10 dB	Fo		15,000	Hz
sound pressure level	at 0.94 W, 0.1 m ave, at 1.0, 1.5, 2.0, 3.0 kHz in 1 cc closed box	86	89	92	dB
distortion	at 1.0 kHz, 0.94 W			10	%
buzz, rattle, etc.	must be normal at sine wave between Fo ~ 20 kHz in 1 cc closed box		2.37		V
polarity	cone will move forward with positive dc current to "+" terminal				
dimensions	15 x 11 x 3				mm
magnet	Nd-Fe-B				
material	PPA				
cone material	PEEK				
terminal	spring contact				
weight			1.4		g
operating temperature		-30		70	°C
storage temperature		-40		85	°C
RoHS	yes				

Notes: 1. All specifications measured at 5~35°C, humidity at 45~85%, under 86~106 kPa pressure, unless otherwise noted.

MECHANICAL DRAWING

units: mm
tolerance: ±0.2 mm

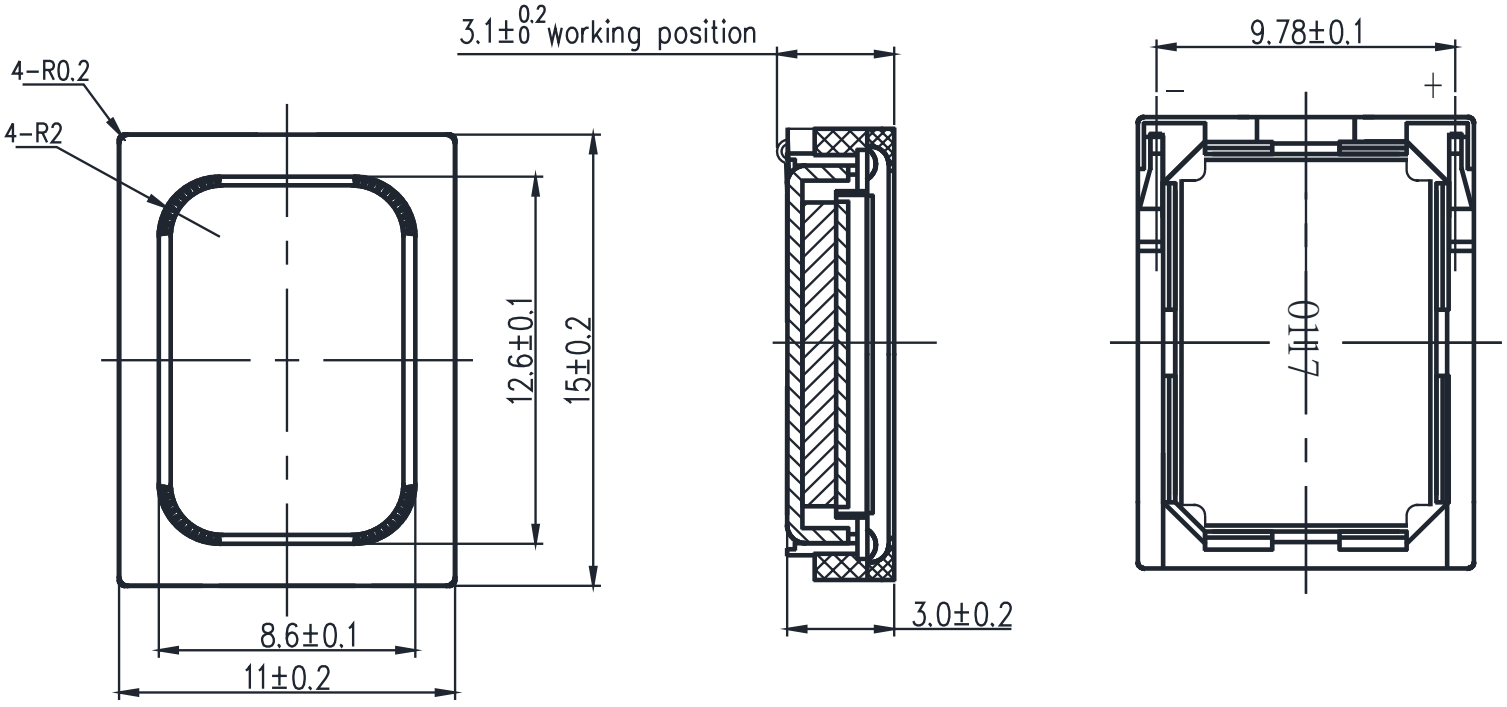

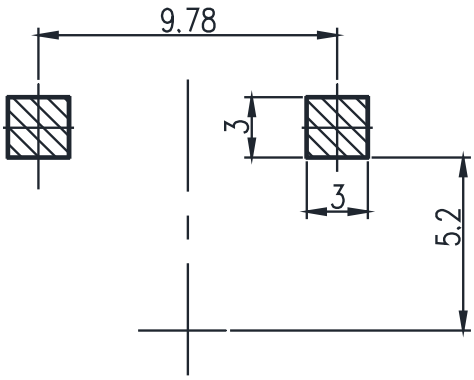

Recommended Pad Layout
Top View

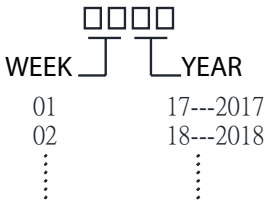

RESPONSE CURVES

Frequency Response Curve

Test condition: 0.94W/10cm in 1cc box

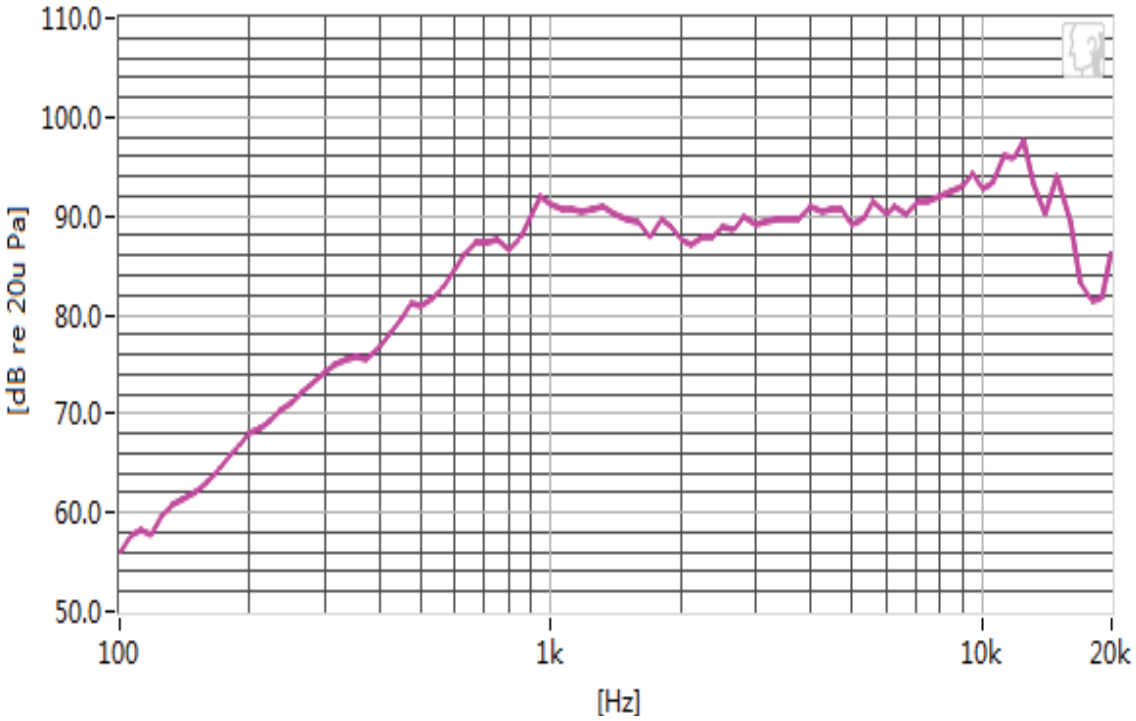

Total Harmonic Distortion Curve

Test condition: 0.94W/10cm in 1cc closed box

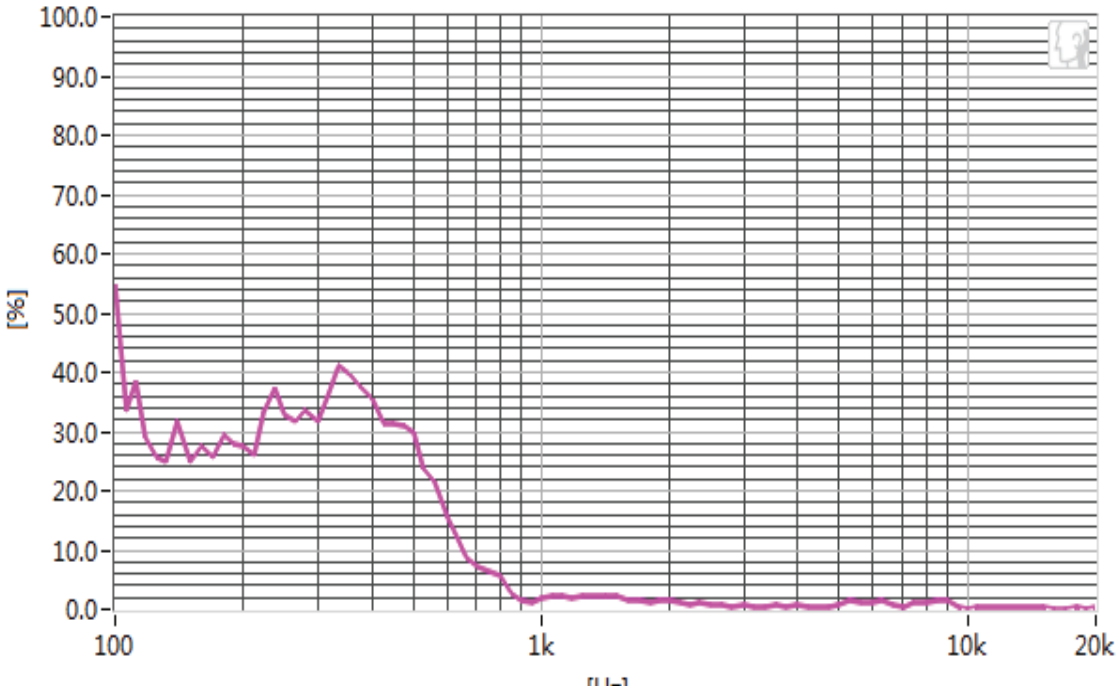

PACKAGING

units: mm

Tray Size: 220 x 300 x 8 mm
Inner Unit Size: 220 x 300 x 85 mm
Carton Size: 460 x 320 x 120 mm
Tray QTY: 100 pcs per tray
Inner Unit QTY: 1,000 pcs per unit
Carton QTY: 2,000 pcs per carton
N.W.: 2.7 KGS
G.W.: 3.95 KGS

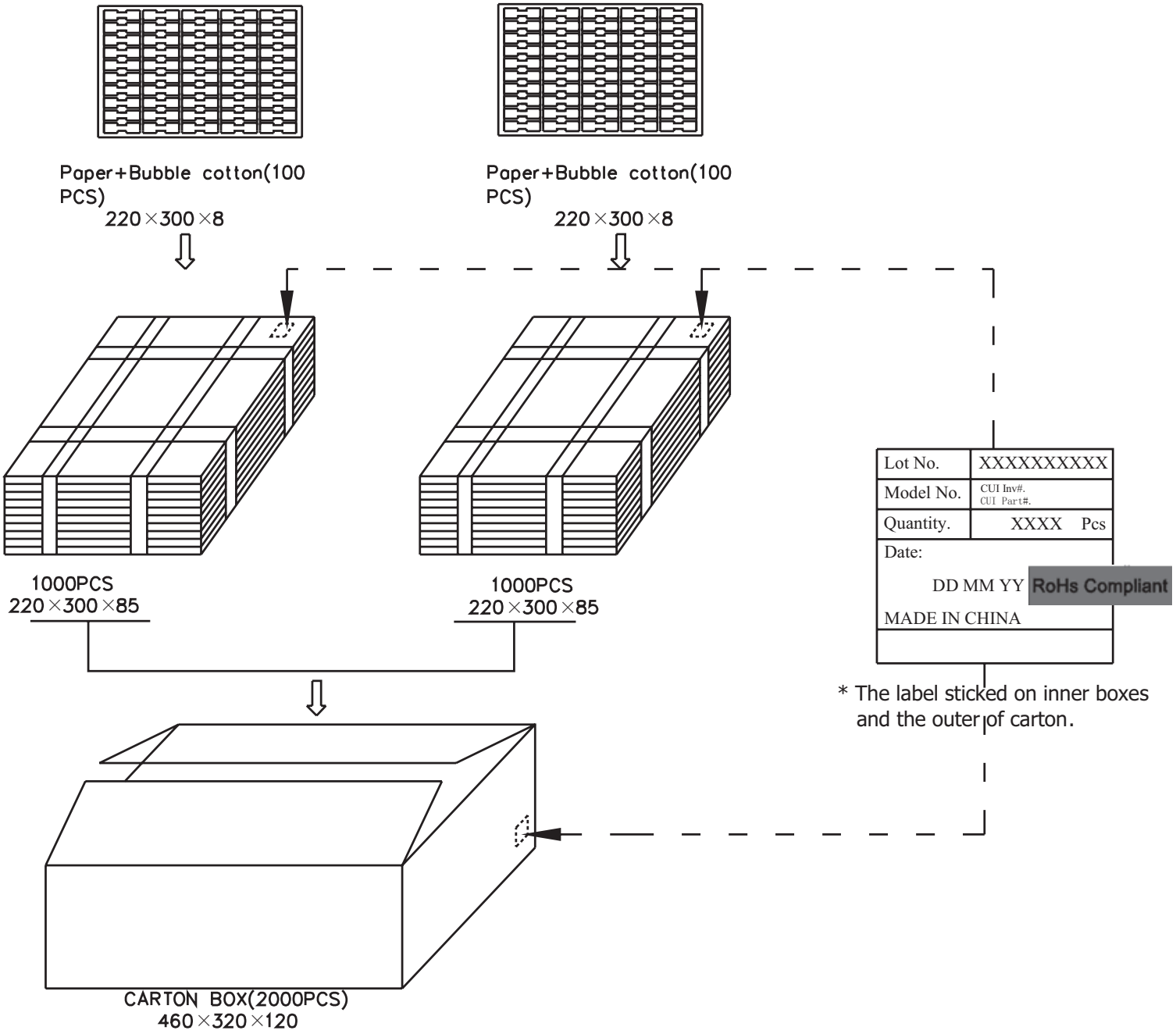

REVISION HISTORY

rev.	description	date
1.0	initial release	08/14/2017
1.01	updated datasheet	12/19/2017
1.02	brand update	01/21/2020
1.03	logo, datasheet style update	08/05/2022

The revision history provided is for informational purposes only and is believed to be accurate.

CUI Devices offers a one (1) year limited warranty. Complete warranty information is listed on our website.

CUI Devices reserves the right to make changes to the product at any time without notice. Information provided by CUI Devices is believed to be accurate and reliable. However, no responsibility is assumed by CUI Devices for its use, nor for any infringements of patents or other rights of third parties which may result from its use.

CUI Devices products are not authorized or warranted for use as critical components in equipment that requires an extremely high level of reliability. A critical component is any component of a life support device or system whose failure to perform can be reasonably expected to cause the failure of the life support device or system, or to affect its safety or effectiveness.

cuidevices.com