MODEL: CEP-1106 | DESCRIPTION: PIEZO BUZZER TRANSDUCER

FEATURES

- piezo transducer with pin mount
- 88 dB SPL
- 2,400 Hz rated frequency

SPECIFICATIONS

parameter	conditions/description	min	typ	max	units
operating voltage				30	Vp-p
current consumption	at 10 Vp-p, 2,400 Hz square wave			18	mA
rated frequency			2,400		Hz
sound pressure level	at 10 cm, 10 Vp-p, 2,400 Hz square wave	88			dB
electrostatic capacity	at 1 kHz/1 V	56,000	80,000	104,000	pF
dimensions	Ø22.8 x 13.5				mm
weight				11.6	g
material	ABS PA-777D (black)				
terminal	pin type (Sn plating)				
operating temperature		-30		85	°C
storage temperature		-40		95	°C
RoHS	yes				

Notes: 1. All specifications measured at 5~35°C, humidity at 45~85%, under 86~106kPa pressure, unless otherwise noted.

SOLDERABILITY

parameter	conditions/description	min	typ	max	units
hand soldering[2]	for maximum 2 seconds	330		380	°C

Notes: 2. Not recommended for wave soldering

MECHANICAL DRAWING

units: mm
tolerance: ±0.5 mm

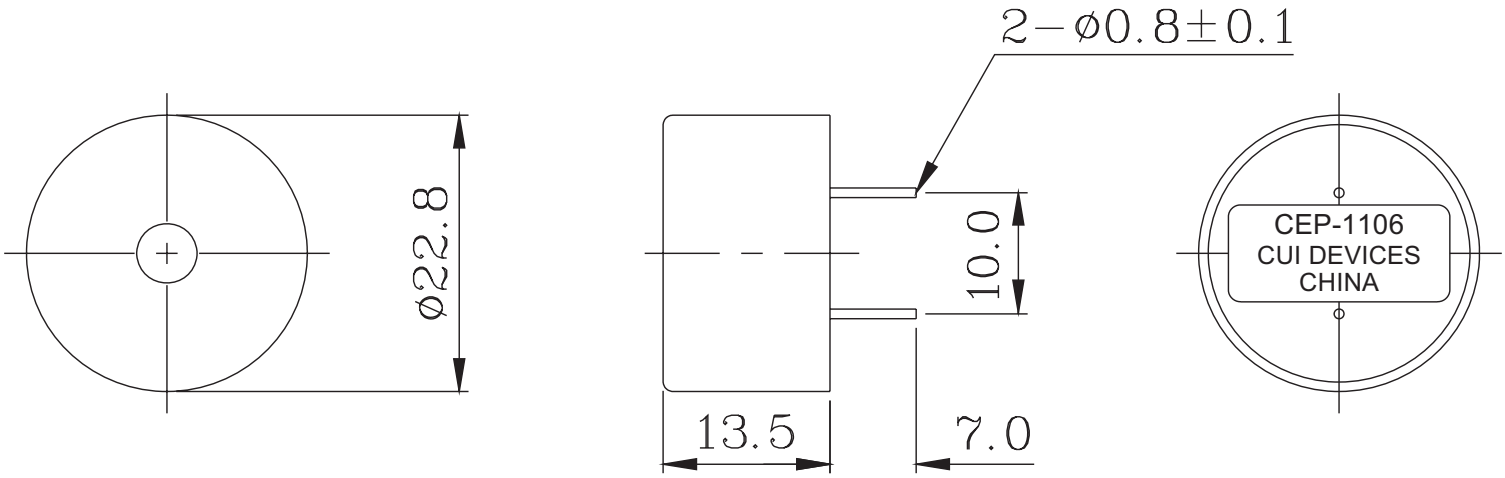

FREQUENCY RESPONSE CURVE

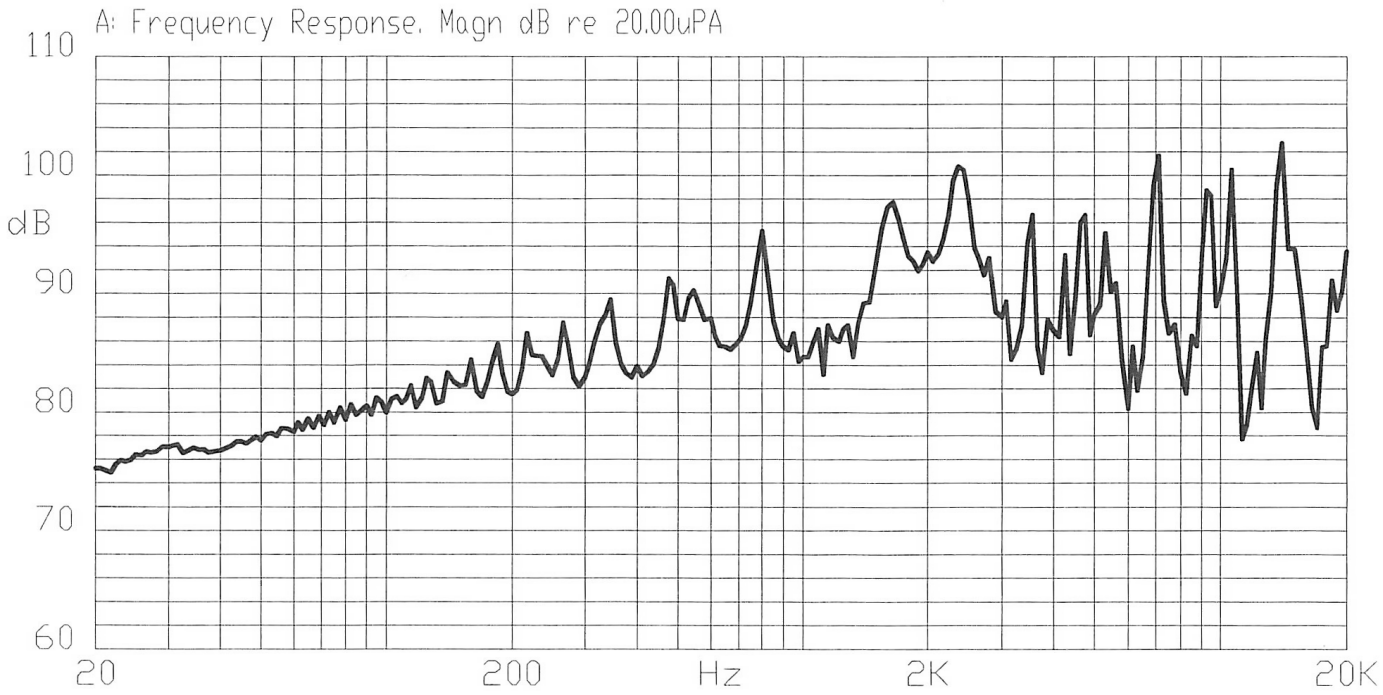

REVISION HISTORY

rev.	description	date
1.0	initial release	09/18/2006
1.01	brand update	03/12/2020
1.02	logo, datasheet style update	08/05/2022

The revision history provided is for informational purposes only and is believed to be accurate.

CUI Devices offers a one (1) year limited warranty. Complete warranty information is listed on our website.

CUI Devices reserves the right to make changes to the product at any time without notice. Information provided by CUI Devices is believed to be accurate and reliable. However, no responsibility is assumed by CUI Devices for its use, nor for any infringements of patents or other rights of third parties which may result from its use.

CUI Devices products are not authorized or warranted for use as critical components in equipment that requires an extremely high level of reliability. A critical component is any component of a life support device or system whose failure to perform can be reasonably expected to cause the failure of the life support device or system, or to affect its safety or effectiveness.